Pilot's Operating Handbook

HB-PKG

AIRLA
FLUGZEUG – SERVICE
CH-3368 Bleienbach

PIPER

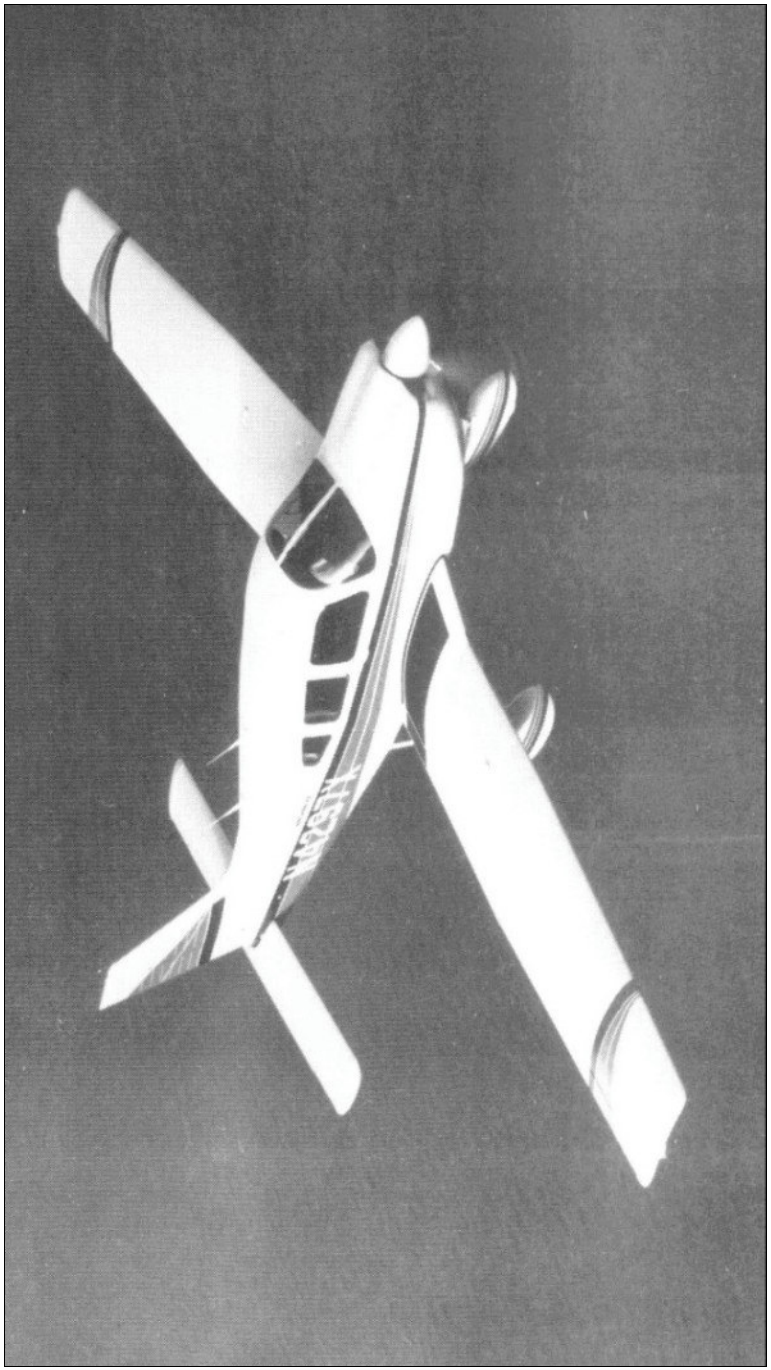

NOTE

Pilot's Operating Handbook Revision Only

This Is Not A Complete Handbook

REPORT: VB-1120
Rev. 15 - 761 722 (PR940329) Dated March 29, 1994

This revision shall be inserted into the current PA-28-181, Archer II Pilot's Operating Handbook, REPORT; VB-1120, issued July 2, 1979.

LUFTFAHRZEUG – FLUGHANDBUCH (AFM)
MANUEL DE VOL DE L'AERONEF (AFM)

für das Luftfahrzeug HB - PKG
pour l'aéronef

Die den Betrieb des Luftfahrzeuges betreffenden Unterlagen sind vom Bundesamt für Zivilluftfahrt als Luftfahrzeug-Flughandbuch genehmigt oder anerkannt. Sie bilden eine Grundlage des Lufttüchtigkeitszeugnisses

Les documents relatifs à l'exploitation de l'aéronef sont approuvés ou reconnus par l'Office fédéral de l'aviation civile en tant que manuel de vol de l'aéronef. Ils forment une base du certificat de navigabilité

und dürfen nur durch das Bundesamt für Zivilluftfahrt oder in dessen Auftrag geändert werden.

et ne peuvent être modifiés que par l'Office fédéral de l'aviation civile ou sur son ordre.

Bei Aenderungen in der Ausrüstung ist dem Bundesamt für Zivilluftfahrt unverzüglich ein Arbeitsbericht im Doppel unter Angabe von Gewicht und Hebelarm der ein- und ausgebauten Teile zusammen mit dem vorliegenden Flughandbuch zuzustellen.

Lors de changements dans l'équipement, il y a lieu d'envoyer immédiatement à l'Office fédéral de l'aviation civile, avec le présent manuel de vol, un rapport de travail en deux exemplaires, et d'indiquer le poids ainsi que le bras de levier des parties installées ou déposées.

Das Luftfahrzeug darf nur nach diesem Flughandbuch, das an Bord mitzuführen ist, betrieben werden.

L'aéronef ne peut être exploité que d'après le présent manuel de vol, qui doit se trouver à bord.

Der Zulassungsbereich des Luftfahrzeuges ist im Anhang zum Flughandbuch festgelegt.

Le champ d'utilisation de l'aéronef est fixé dans l'annexe du manuel de vol.

3003 Bern, den 20. Oktober 1986
3003 Berne, le

BUNDESAMT FÜR ZIVILLUFTFAHRT, Sektion Flugmaterial
OFFICE FEDERAL DE L'AVIATION CIVILE, Section du matériel aéronautique
i.A. / p.o.

BZL 57.21 df - 8.81

BZL Seite A-1
OFA Page

Bemerkungen / Observations

2. Anzahl Personen an Bord
Nombre de personnes à bord

2.1 Mindestflugbesatzung * Equipage minimal de conduite	1 Pil.			
2.2 Höchstzulässige Anzahl Passagiere Nombre maximal de passagers	3			

* Allfällige besondere Betriebsvorschriften bleiben vorbehalten.
D'éventuelles prescriptions d'exploitation particulières restent réservées.

Bundesamt für Zivilluftfahrt
Office fédéral de l'aviation civile

BZL Seite B
OFA Page

Hauptsächlichste Daten des Luftfahrzeuges HB - PKG
Données principales de l'aéronef

1. Gewichte und Schwerpunktlage
Poids et position du centre de gravité

1.1 Höchstzulässiges Abfluggewicht Kat. [N] * 1156 kp 2550 lbs
Poids maximal autorisé au décollage Cat.

* Andere Kategorien siehe Flughandbuch
Autres catégories voir manuel de vol

1.2 Höchstzulässiges Landegewicht 1156 kp 2550 lbs
Poids maximal autorisé à l'atterrissage

1.3 Rüstgewicht
Poids à vide

Im Rüstgewicht sind inbegriffen:
Dans le poids à vide sont compris:

- [X] Ausrüstung gemäss Ausrüstungsliste / L'équipement selon la liste d'équipement
- [X] Nicht verwendbarer Treibstoff / Le carburant non utilisable
- [X] Nicht verwendbarer Schmierstoff / Le lubrifiant non utilisable
- [X] Verwendbarer Schmierstoff / Le lubrifiant utilisable
- [X] Hydraulikflüssigkeit / Le liquide hydraulique
- [ ] Ballast (sofern eingebaut) / Lest (si installé)
- [ ] Getriebeöl / Le lubrifiant de boîtes de transmission
- [ ]

Datum Date	Rüstgewicht Poids à vide kp / lbs	Schwerpunktlage Position du centre de gravité m / in	Rüstgewichtsmoment Moment du poids à vide kpm / lbs. in	Zuladung Charge utile kp / lbs
20.10.86	FOR WEIGHT AND BALANCE REFER TO THE " WEIGHT AND BALANCE RECORD" (Fig.6-7)			
				FOCA FL/Mü

BZL 57.211 df - 8.81

BZL Seite
OFA Page B-1

Datum Date	Rüstgewicht Poids à vide	Schwerpunktlage Position du centre de gravité	Rüstgewichtsmoment Moment du poids à vide	Zuladung Charge utile
	kp / lbs	m / in	kpm / lbs. in	kp / lbs

ARCHER II
PA-28-181

PILOT'S OPERATING HANDBOOK

AND

FAA APPROVED AIRPLANE FLIGHT MANUAL

AIRPLANE SERIAL NO. 2890008

AIRPLANE REGIST. NO. HB - PKG

PA-28-181
REPORT: VB-1120 FAA APPROVED BY: Ward Evans

WARD EVANS
D.O.A. NO. SO-1
PIPER AIRCRAFT CORPORATION
VERO BEACH, FLORIDA

DATE OF APPROVAL:
JULY 2, 1979

FAA APPROVED IN NORMAL AND UTILITY CATEGORIES BASED ON CAR 3. THIS HANDBOOK INCLUDES THE MATERIAL REQUIRED TO BE FURNISHED TO THE PILOT BY CAR 3 AND CONSTITUTES THE APPROVED AIRPLANE FLIGHT MANUAL AND MUST BE CARRIED IN THE AIRPLANE AT ALL TIMES.

PIPER

WARNING

EXTREME CARE MUST BE EXERCISED TO LIMIT THE USE OF THIS HANDBOOK TO APPLICABLE AIRCRAFT. THIS HANDBOOK IS VALID FOR USE WITH THE AIRPLANE IDENTIFIED ON THE FACE OF THE TITLE PAGE. SUBSEQUENT REVISIONS SUPPLIED BY PIPER AIRCRAFT CORPORATION MUST BE PROPERLY INSERTED.

Published by
PUBLICATIONS DEPARTMENT
Piper Aircraft Corporation
Issued: July 2, 1979

APPLICABILITY

Application of this handbook is limited to the specific Piper PA-28-181 model airplane designated by serial number and registration number on the face of the title page of this handbook.

This handbook cannot be used for operational purposes unless kept in a current status.

REVISIONS

The information compiled in the Pilot's Operating Handbook, with the exception of the equipment list, will be kept current by revisions distributed to the airplane owners. The equipment list was current at the time the airplane was licensed by the manufacturer and thereafter must be maintained by the owner.

Revision material will consist of information necessary to update the text of the present handbook and/or to add information to cover added airplane equipment.

I. Revisions

Revisions will be distributed whenever necessary as complete page replacements or additions and shall be inserted into the handbook in accordance with the instructions given below.

1. Revision pages will replace only pages with the same page number.
2. Insert all additional pages in proper numerical order within each section.
3. Page numbers followed by a small letter shall be inserted in direct sequence with the same common numbered page.

II. Identification of Revised Material

Revised text and illustrations shall be indicated by a black vertical line along the outside margin of the page, opposite revised, added or deleted material. A line along the outside margin of the page opposite the page number will indicate that an entire page was added.

Black lines will indicate only current revisions with changes and additions to or deletions of existing text and illustrations. Changes in capitalization, spelling, punctuation or the physical location of material on a page will not be identified.

ORIGINAL PAGES ISSUED

The original pages issued for this handbook prior to revision are given below:

Title, ii through vii, 1-1 through 1-21, 2-1 through 2-10, 3-1 through 3-15, 4-1 through 4-21, 5-1 through 5-29, 6-1 through 6-43, 7-1 through 7-24, 8-1 through 8-18, 9-1 through 9-14, and 10-1 through 10-2.

PILOT'S OPERATING HANDBOOK LOG OF REVISIONS

Current Revisions to the PA-28-181 Archer II Pilot's Operating Handbook, REPORT: VB-1120 issued July 2, 1979.

Revision Number and Code	Revised Pages	Description of Revision	FAA Approval Signature and Date
Rev. 1 (PR800529)	1-3	Revised para. 1.7 (c).	
	2-3	Revised para. 2.7 (d) (8).	
	2-4	Revised para. 2.9 (a).	
	2-10	Added placards.	
	3-3	Revised wording.	
	3-10	Revised wording.	
	4-8	Corrected spelling.	
	4-11	Revised para 4.9.	
	4-20	Revised wording.	
	6-i	Revised Table of Contents.	
	6-6	Revised Figure 6-5.	
	6-12	Revised Figure 6-15.	
	6-12a thru 6-12d	Added pages and added new info.	
	6-13	Revised para. no.	
	6-22	Added item 97 b.	
	6-23	Added item 105.	
	6-25	Relocated items to pg. 6-26; added new item 145.	
	6-26	Relocated items to pg. 6-27; added new items 147, 149; re-numbered items.	
	6-27	Relocated items to pg. 6-28; renumbered items.	
	6-28	Relocated items to pg. 6-29b and pg. 6-29a.	
	6-29	Relocated items to pg. 6-29a.	
	6-29a	Added new pg.; relocated items from pg. 6-29 and item 203 from pg. 6-28.	
	6-29b	Added new pg. and new items 219, 227, 229.	

PILOT'S OPERATING HANDBOOK LOG OF REVISIONS (cont)

Revision Number and Code	Revised Pages	Description of Revision	FAA Approval Signature and Date
Rev. 1 (cont)	6-29c	Added new pg. and new items 231 thru 241.	
	6-29d	Added new pg. and new item 243; relocated and renumbered items from pg. 6-30.	
	6-30	Relocated and renumbered items from pg. 6-31.	
	6-31	Relocated items from pg. 6-32; added new items 265 and 267.	
	6-32	Relocated item from pg. 6-33; renumbered items.	
	6-33	Relocated and renumbered items from pg. 6-34; added new item 285.	
	6-34	Renumbered items; added new items 289, 291, 295.	
	6-35	Renumbered items; relocated item to pg. 6-36; added item from pg. 6-34.	
	6-36	Renumbered items; relocated item to pg. 6-37.	
	6-37	Renumbered items; relocated item to pg. 6-38.	
	6-38	Renumbered items; relocated item from pg. 6-37.	
	6-39	Renumbered items.	
	6-41	Relocated item to pg. 6-42; added new item 429.	
	6-42	Relocated item to pg. 6-43; renumbered items; added items 431 and 433.	
	6-43	Added item from pg. 6-42.	
	7-i	Added para. 7.39 to Table of Contents.	
	7-20	Revised material.	
	7-24	Added para. 7.39.	

PILOT'S OPERATING HANDBOOK LOG OF REVISIONS (cont)

Revision Number and Code	Revised Pages	Description of Revision	FAA Approval Signature and Date
Rev. 1 (cont)	7-25	Added pg.; added new info.	
	8-12	Revised para. 8.21 (a) (b).	
	8-12a	Added pg.; added new info.	
	8-12b	Added pg.; relocated material from pg. 8-12 and 8-13; added cautions and revised info. (c).	
	8-13	Relocated info. to pg. 8-12; added info. from pg. 8-14.	
	8-14	Relocated info. to pg. 8-13; added info. from pg. 8-15.	Ward Evans Ward Evans May 29, 1980
	8-15	Relocated info. to pg. 8-14.	
	10-2	Added para. 10.3 (j).	
Rev. 2 (PR800822)	9-i	Added supplement 5 and pages	
	9-15 thru 9-18	Added supplement 5 (Century 21 Autopilot).	Ward Evans Ward Evans Aug. 22, 1980
Rev. 3 (PR810114)	Title	Revised approval.	
	ii	Revised warning.	
	2-3	Revised para. 2.7 (d) (6).	
	2-4	Revised para. 2.9 (c).	
	3-i	Changed para. 3.23 title, page nos.	
	3-6	Changed alternator failure to electrical failures; add info., moved info. to pg. 3-7.	
	3-7	Relocated info. from pg. 3-6; moved info. to pg. 3-8.	
	3-8	Relocated info. from pg. 3-7.	

PILOT'S OPERATING HANDBOOK LOG OF REVISIONS (cont)

Revision Number and Code	Revised Pages	Description of Revision	FAA Approval Signature and Date
Rev. 3 (cont)	3-13	Revised, retitled para. 3.23 with added info.	
	3-14	Added para. 3.24; moved para. 3.25 and 3.27 to pg. 3-15, and para. 3.29 to pg. 3-16.	
	3-15	Relocated para. 3.25 and 3.27 from pg. 3-14; moved para. 3.31 to pg. 3-16.	
	3-16	New page, relocated para. 3.29 from pg. 3-14 and para. 3.31 from pg. 3-15.	
	3-17	New page, added relocated info.	
	6-19	Added item 61.	
	6-29a	Added item 204.	
	6-31	Revised item 267.	
	6-33	Added item 274; revised item 275; moved items 283 and 285 to pg. 6-34.	
	6-34	Relocated items 283 and 285 from pg. 6-33; moved items 291 thru 295 to pg. 6-35.	
	6-35	Relocated items 291 thru 295 from pg. 6-34; moved items 301 and 303 to pg. 6-36.	
	6-36	Relocated items 301 and 303 from pg. 6-35; moved item 309 to pg. 6-37.	
	6-37	Relocated item 309 from pg. 6-36; moved items 317 and 319 to pg. 6-38.	
	6-38	Relocated items 317 and 319 from pg. 6-37; moved item 327 to pg. 6-39.	
	6-39	Relocated item 327 from pg. 6-38; moved items 333 thru 337 to pg. 6-40.	

PILOT'S OPERATING HANDBOOK LOG OF REVISIONS (cont)

Revision Number and Code	Revised Pages	Description of Revision	FAA Approval Signature and Date
Rev. 3 (cont)	6-40	Relocated items 333 thru 337 from pg. 6-39; moved items 409 thru 417 to pg. 6-41.	
	6-41	Relocated items 409 thru 417 from pg. 6-40; moved items 423 thru 429 to pg. 6-42.	
	6-42	Relocated items 423 thru 429 from pg. 6-41; moved items 435 thru 441 to pg. 6-43.	
	6-43	Relocated items 435 thru 441 from pg. 6-42; moved info. to pg. 6-44.	
	6-44	New page; relocated info. from pg. 6-43.	
	7-7	Revised para. 7.13.	
	7-10	Revised para. 7.15.	
	7-11	Revised figure 7-11.	
	7-12	Cont. para. 7.15 revision.	
	7-13	Cont. para. 7.15 revision.	
	7-20	Revised para. 7.25.	
	9-i	Added supplement 6.	
	9-15 thru 9-18	Retyped supplement 5.	
	9-19 thru 9-20	Added supplement 6 (Piper Control Wheel Clock)	Ward Evans Jan. 14, 1981
Rev. 4 (PR810625)	1-4	Revised para. 1.13.	
	5-1	Moved info. to pg. 5-2.	
	5-2	Relocated info. from pg. 5-1; added Warning.	
	6-6	Revised Figure 6-5.	
	6-16	Revised item 21.	

PILOT'S OPERATING HANDBOOK LOG OF REVISIONS (cont)

Revision Number and Code	Revised Pages	Description of Revision	FAA Approval Signature and Date
Rev. 4 (cont)	6-21	Revised items 85 and 87; moved item 95 to pg. 6-22.	
	6-22	Relocated item 95 from pg. 6-21.	
	6-25	Revised item 137.	
	6-31	Renumbered and moved item to pg. 6-31b.	
	6-31a	New page.	
	6-31b	Added items 268 and 269; relocated renumbered item from pg. 6-31.	
	6-33	Added item 276; moved item 281 to pg. 6-34.	
	6-34	Relocated item 281 from pg. 6-33.	
	6-35	Revised item 291.	
	6-42	Revised items 427, 429 and 431; moved item 433 to pg. 6-43.	
	6-43	Relocated revised item 433 from pg. 6-42.	
	6-44	Removed info.	Ward Evans
	7-7	Revised para. 7.11.	Ward Evans
	7-10	Revised para. 7.15.	June 25, 1981
Rev. 5 (PR811116)	3-i, 4-i	Revised Table of Contents.	
	4-4, 4-7, 4-8	Revise Normal Procedure checklist.	
	4-12	Relocated para. 4.13 info. to pg. 4-13; added Note; revised info.	
	4-13	Relocated Note to pg. 4-14; added para. 4.13 info. from pg. 4-12.	
	4-14	Relocated para. 4.17 info. to pg. 4-15; added Note from pg. 4-13.	

PILOT'S OPERATING HANDBOOK LOG OF REVISIONS (cont)

Revision Number and Code	Revised Pages	Description of Revision	FAA Approval Signature and Date
Rev. 5 (cont)	4-15	Relocated para. 4.21 to pg. 4-16; added para. 4.17 info. from pg. 4-14.	
	4-16	Relocated para. 4.23 and para. 4.25 to pg. 4-17; added para. 4.21 from pg. 4-15; added Note; revised info.	
	4-17	Relocated para. 4.27 info. to pg. 4-18; added para. 4.23 and para. 4.25 from pg. 4-16.	
	4-18	Relocated para. 4.29 info. to pg. 4-19; relocated para. 4.31 to pg. 4-19 and pg. 4-20; added para. 4.27 info. from pg. 4-17.	
	4-19	Relocated info. to pg. 4-20; added para. 4.29 and para. 4.31 info. from pg. 4-18; revised para. 4.31.	
	4-20	Relocated para. 4.37 and para. 4.39 to pg. 4-21; added info. from pg. 4-18 and pg. 4-19.	
	4-21	Relocated para. 4.41 to pg. 4-22; added para. 4.37 and para. 4.39 from pg. 4-20.	
	4-22	Added pg.; added para. 4.41 from pg. 4-21.	
	6-i	Revised Table of Contents.	
	6-13	Revised para. 6.11.	
	6-33	Relocated item 279 to pg. 6-34; renumbered old item 277; added new item 277.	
	6-34	Relocated item 289 to pg. 6-35; added item 279 from pg. 6-33.	

PILOT'S OPERATING HANDBOOK LOG OF REVISIONS (cont)

Revision Number and Code	Revised Pages	Description of Revision	FAA Approval Signature and Date
Rev. 5 (cont)	6-35	Relocated items 297 and 299 to pg. 6-36; added items 289 from pg. 6-34.	
	6-36	Relocated item 307 to pg. 6-37; added items 297 and 299 from pg. 6-35.	
	6-37	Relocated items 313 and 315 to pg. 6-38; added item 307 from pg. 6-36.	
	6-38	Relocated item 325 to pg. 6-39; added items 313 and 315 from pg. 6-37.	
	6-39	Relocated item 329 to pg. 6-40 and renumbered item; relocated item 331 to pg. 6-40; revised item 328; added new item 329.	
	6-40	Relocated items 405 and 407 to pg. 6-41; added re-numbered items 330 and 331 from pg. 6-39.	
	6-41	Relocated items 419 and 421 to pg. 6-42; added revised item 405 from pg. 6-40; added item 407 from pg. 6-40.	
	6-42	Relocated item 431 to pg. 6-43; added items 419 and 421 from pg. 6-41.	
	6-43	Relocated item 443 to pg. 6-44; added item 431 from pg. 6-42.	
	6-44	Added item 443 from pg. 6-43; added new item 445.	Ward Evans
	7-20	Revised info.	Ward Evans
	9-18	Revised item (c) (4).	Nov. 16, 1981
	9-19	Revised item (a).	

PILOT'S OPERATING HANDBOOK LOG OF REVISIONS (cont)

Revision Number and Code	Revised Pages	Description of Revision	FAA Approval Signature and Date
Rev. 6 (PR820721)	iii	Revised handbook info.	
	1-i	Removed para. 1.21 - conversion factor index.	
	1-4	Added info. to para. 1.11.	
	2-1	Revised para. 2.1.	
	2-4	Added info. to para. 2.11.	
	2-9	Corrected placard error.	
	3-i	Expanded emerg. procedure index; moved info. to new pg. 3-ii.	
	3-ii	New pg.; relocated info. from pg. 3-i.	
	4-i	Expanded normal procedure index; moved info. to new pg. 4-ii.	
	4-ii	New pg.; relocated info. from pg. 4-i.	
	4-1	Revised para. 4.1.	
	6-i	Revised index pg.	
	6-6	Revised fig. 6-5 info.	
	6-7	Revised fig. 6-7 info.	
	6-9	Added info. to fig. 6-9.	
	6-10	Added info. to fig. 6-11.	
	6-12a	Revised para. 6.9.	
	7-20	Revised para. 7.25.	
	7-21	Revised para. 7.31; moved para. 7.33 info. to pg. 7-22.	
	7-22	New pg.; relocated info. from pg. 7-21.	
	9-i	Updated Supplement index pg.	
	9-13	Revised Supplement 4 (pitch trim).	

PILOT'S OPERATING HANDBOOK LOG OF REVISIONS (cont)

Revision Number and Code	Revised Pages	Description of Revision	FAA Approval Signature and Date
Rev. 6 (cont)	9-21 thru 9-40	Added new Supplement 7.	
	9-41 thru 9-66	Added new Supplement 8.	Ward Evans Ward Evans July 21, 1982
Rev. 7 (PR821115)	1-12 thru 1-21	Deleted para. 1.21 and pages.	
	5-3 thru 5-7	Revised para. 5.5.	
	7-12	Relocated info. from pg. 7-13.	
	7-13	Moved info. to pg. 7-12, added Caution.	
	8-2	Revised para. 8.3.	
	8-3	Revised para. 8.3 and 8.5, relocated info. from pg. 8-4.	
	8-4	Moved revised para. 8.5 to pg. 8-3, relocated info. from pg. 8-5.	Ward Evans Ward Evans Nov. 15, 1982
	8-5	Moved info. to pg. 8-4.	
Rev. 8 (PR830720)	1-9	Deleted MEA.	
	1-12	Deleted pg. 1-12, para. 1.21.	
	2-10	Moved fuel placards to pg. 2-11.	
	2-11	Added new page (GAMA placard).	
	6-9	Revised fig. 6-9.	
	8-2	Revised para. 8.3.	
	8-3	Revised para. 8.5.	
	9-67 thru 9-70	Added Supplement 9.	Ward Evans Ward Evans July 20, 1983

PILOT'S OPERATING HANDBOOK LOG OF REVISIONS (cont)

Revision Number and Code	Revised Pages	Description of Revision	FAA Approval Signature and Date
Rev. 9 (PR840629)	vii	Revised Table of Contents.	
	1-3	Revised para. 1.7.	
	1-7, 1-8	Revised item (b).	
	2-3	Revised para. 2.7.	
	3-1	Revised para. 3.1.	
	4-4, 4-6	Revised procedures.	
	4-11	Revised para. 4.9.	
	4-15	Revised para. 4.19.	
	5-29	Revised Fig. 5-37.	
	6-1	Revised para. 6.1.	
	6-2	Revised para. 6.3.	
	6-5	Revised para. 6.5.	
	6-16	Revised item (b).	
	7-3	Revised para. 7.7.	
	7-8	Revised para. 7.13.	
	7-10	Revised para. 7.15.	
	7-14	Revised para. 7.17.	
	7-21	Revised para. 7.33.	
	8-12	Revised para. 8.21.	Ward Evans Ward Evans June 29, 1984
	10-i	Revised Table of Contents.	
	10-1, 10-2	Changed Safety to Operating.	
Rev. 10 (PR850705)	4-18	Added info. to para. 4.27.	
	5-20 thru 5-25	Revised charts.	
	7-7	Revised para. 7.11.	
	7-9	Relocated info. from pg. 7-10.	
	7-10	Added info. to para. 7.15.	
	7-20	Added info. to para. 7.25.	D.H. Trompler D.H. Trompler Sept. 16, 1985
Rev. 11 (PR861020)	9-i	Revised Table of Contents.	
	9-71 thru 9-76	Added Supplement 10. (Aux. Vac. System)	D.H. Trompler D.H. Trompler 12/3/86 Date

PILOT'S OPERATING HANDBOOK LOG OF REVISIONS (cont)

Revision Number and Code	Revised Pages	Description of Revisions	FAA Approval Signature and Date
Rev. 12 (PR881215)	8-1	Revised para. 8.1.	
	8-2	Revised para. 8.1 and 8.3.	
	8-3	Revised para. 8.3.	
	8-12	Revised para. 8.19.	
	9-i	Added Supplement 10 to T.O.C.	
	9-9	Revised Section 3, para. (a).	D.H.Trompler Jan. 10, 1989
Rev. 13 (PR900202)	vi-j	Added Rev. 13 to Log of Revisions.	
	1-6 & 1-7	Revised para. 1.19.	
	4-6	Revised para. 4.5.	
	5-4	Revised para. 5.5.	
	6-10	Revised fig. 6-11.	
	6-12b	Revised para. 6.9.	
	6-12c	Added fig. 6-17 title.	
	7-24	Moved para. 7.39 to pg. 7-26.	
	7-25	Revised para. 7.37. Added Narco ELT 910 information.	
	7-26	Added page. Relocated para. 7.39 from pg. 7-24. Revised para. 7.39.	
	8-12	Revised para's. 8.19 & 8.21.	
	8-12a	Revised Fuel Grade Chart.	
	9-5	Added Sec. 6 & 7.	
	9-10	Revised Preflight (b)(1).	
	9-35	Revised item 10.	
	9-37	Revised item 4.	
	9-53	Removed text.	
	9-54	Revised item 13.	
	9-61	Revised item 10.	D. H .Trompler Mar. 26, 1990

PILOT'S OPERATING HANDBOOK LOG OF REVISIONS (cont)

Revision Number and Code	Revised Pages	Description of Revisions	FAA Approval Signature and Date
Rev. 14 (PR930107)	vi-k	Added log of revision page	
	vi-l	Added log of revision page	
	9-i	Added Supplement 11 to T.O.C.	
	9-77	Added Supplement 11	W. R. MOREU Jan. 07, 1993
Rev. 15 (PR940329)	7-i	Revised T.O.C.	
	7-26	Relocated para. 7.39 from pg. 7-26 to page 7-27	
	7-26	Revised para. 7.37 added ELT info.	
	7-27	Added page.	
	7-28	Added Page.	W. R. MOREU March 29, 1994

PILOT'S OPERATING HANDBOOK LOG OF REVISIONS (cont)

Revision Number and Code	Revised Pages	Description of Revisions	FAA Approval Signature and Date

TABLE OF CONTENTS

SECTION 1 GENERAL

SECTION 2 LIMITATIONS

SECTION 3 EMERGENCY PROCEDURES

SECTION 4 NORMAL PROCEDURES

SECTION 5 PERFORMANCE

SECTION 6 WEIGHT AND BALANCE

SECTION 7 DESCRIPTION AND OPERATION OF THE AIRPLANE AND ITS SYSTEMS

SECTION 8 AIRPLANE HANDLING, SERVICING AND MAINTENANCE

SECTION 9 SUPPLEMENTS

SECTION 10 OPERATING TIPS

TABLE OF CONTENTS

SECTION 1

GENERAL

Paragraph No.		Page No.
1.1	Introduction	1-1
1.3	Engines	1-3
1.5	Propellers	1-3
1.7	Fuel	1-3
1.9	Oil	1-4
1.11	Maximum Weights	1-4
1.13	Standard Airplane Weights	1-4
1.15	Baggage Space	1-5
1.17	Specific Loadings	1-5
1.19	Symbols, Abbreviations and Terminology	1-6

SECTION 1

GENERAL

1.1 INTRODUCTION

This Pilot's Operating Handbook is designed for maximum utilization as an operating guide for the pilot. It includes the material required to be furnished to the pilot by C.A.R. 3 and FAR Part 21, Subpart J. It also contains supplemental data supplied by the airplane manufacturer.

This handbook is not designed as a substitute for adequate and competent flight instruction, knowledge of current airworthiness directives, applicable federal air regulations or advisory circulars. It is not intended to be a guide for basic flight instruction or a training manual and should not be used for operational purposes unless kept in a current status.

Assurance that the airplane is in an airworthy condition is the responsibility of the owner. The pilot in command is responsible for determining that the airplane is safe for flight. The pilot is also responsible for remaining within the operating limitations as outlined by instrument markings, placards, and this handbook.

Although the arrangement of this handbook is intended to increase its in-flight capabilities, it should not be used solely as an occasional operating reference. The pilot should study the entire handbook to familiarize himself with the limitations, performance, procedures and operational handling characteristics of the airplane before flight.

The handbook has been divided into numbered (aratic) sections, each provided with a "finger-tip" tab divider for quick reference. The limitations and emergency procedures have been placed ahead of the normal procedures, performance and other sections to provide easier access to information that may be required in flight. The "Emergency Procedures" Section has been furnished with a red tab divider to present an instant reference to the section. Provisions for expansion of the handbook have been made by the deliberate omission of certain paragraph numbers, figure numbers, item numbers and pages noted as being intentionally left blank.

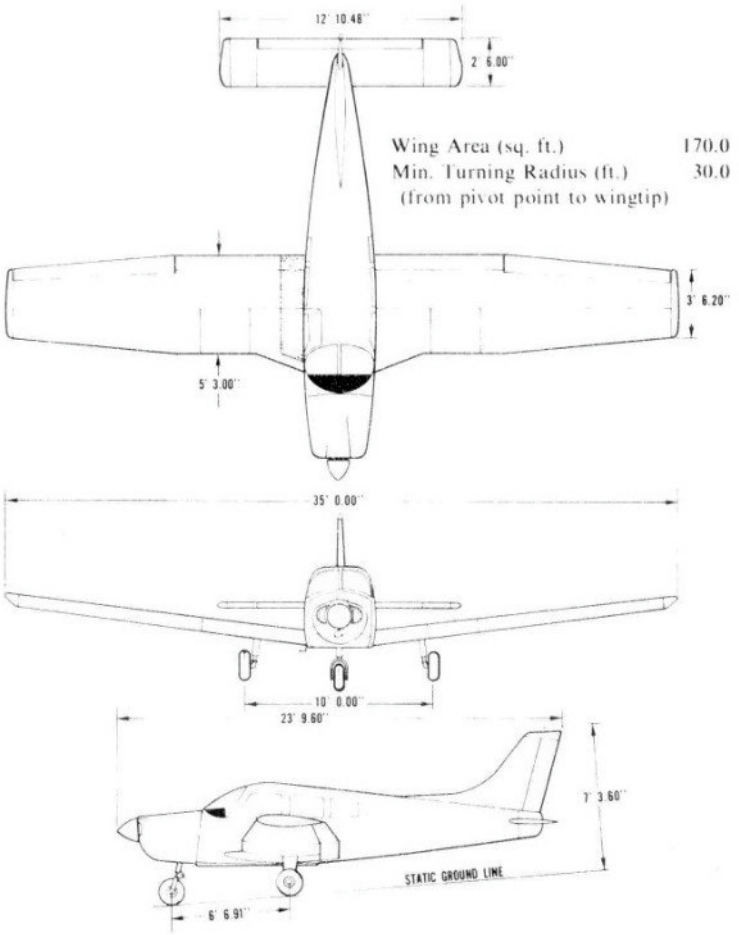

THREE VIEW
Figure 1-1

1.3 ENGINES

(a) Number of Engines	1
(b) Engine Manufacturer	Lycoming
(c) Engine Model Number	O-360-A4M or O-360-A4A
(d) Takeoff Power - 5 Minute Limit (BHP)	180
(e) Takeoff Engine Speed - 5 Minute Limit (RPM)	2700
(f) Maximum Continuous Power (BHP)	178
(g) Maximum Continuous Engine Speed (RPM)	2650
(h) Bore (inches)	5.125
(i) Stroke (inches)	4.375
(j) Displacement (cubic inches)	361.0
(k) Compression Ratio	8.5:1
(l) Engine Type	Four Cylinder, Direct Drive, Horizontally Opposed, Air Cooled

1.5 PROPELLERS

(a) Number of Propellers	1
(b) Propeller Manufacturer	Sensenich
(c) Model	76EM8S5-0-62
(d) Number of Blades	2
(e) Propeller Diameter (inches)	
(1) Maximum	76
(2) Minimum	76
(f) Propeller Type	Fixed Pitch

1.7 FUEL

AVGAS ONLY

(a) Fuel Capacity (U.S. gal.) (total)	50
(b) Usable Fuel (U.S. gal.) (total)	48
(c) Fuel	
(1) Minimum Octane	100 Green or 100LL Blue Aviation Grade
(2) Alternate Fuel	Refer to latest issue of Lycoming Instruction No. 1070.

1.9 OIL

(a) Oil Capacity (U.S. quarts)		8
(b) Oil Specification		Refer to latest issue of Lycoming Service Instruction 1014.
(c) Oil Viscosity per Average Ambient Temp. for Starting	Single	Multi
(1) Above 60° F	S.A.E. 50	S.A.E. 40 or 50
(2) 30° F to 90° F	S.A.E. 40	S.A.E. 40
(3) 0° F to 70° F	S.A.E. 30	S.A.E. 40 or 20W-30
(4) Below 10° F	S.A.E. 20	S.A.E. 20W-30

1.11 MAXIMUM WEIGHTS

	Normal	Utility
(a) Maximum Ramp Weight (lbs.)	2558	2138
(b) Maximum Takeoff Weight (lbs.)	2550	2130
(c) Maximum Landing Weight (lbs.)	2550	2130
(d) Maximum Weights in Baggage Compartment (lbs.)	200	0

1.13 STANDARD AIRPLANE WEIGHTS

Refer to Figure 6-5 for the Standard Empty Weight and the Useful Load.

1.15 BAGGAGE SPACE

(a) Compartment Volume (cubic feet)	24
(b) Entry Width (inches)	22
(c) Entry Height (inches)	20

1.17 SPECIFIC LOADINGS

(a) Wing Loading (lbs. per sq. ft.)	15.0
(b) Power Loading (lbs. per hp)	14.2

1.19 SYMBOLS, ABBREVIATIONS AND TERMINOLOGY

The following definitions are of symbols, abbreviations and terminology used throughout the handbook and those which may be of added operational significance to the pilot.

(a) General Airspeed Terminology and Symbols

CAS	Calibrated Airspeed means the indicated speed of an aircraft, corrected for position and instrument error. Calibrated airspeed is equal to true airspeed in standard atmosphere at sea level.
KCAS	Calibrated Airspeed expressed in ``Knots.''
GS	Ground Speed is the speed of an airplane relative to the ground.
IAS	Indicated Airspeed is the speed of an aircraft as shown on the airspeed indicator when corrected for instrument error. IAS values published in this handbook assume zero instrument error.
KIAS	Indicated Airspeed expressed in ``Knots.''
TAS	True Airspeed is the airspeed of an airplane relative to undisturbed air which is the CAS corrected for altitude, temperature and compressibility.
VA	Maneuvering Speed is the maximum speed at which application of full available aerodynamic control will not overstress the airplane.
VFE	Maximum Flap Extended Speed is the highest speed permissible with wing flaps in a prescribed extended position.

VNE/MNE	Never Exceed Speed or Mach Number is the speed limit that may not be exceeded at any time.
VNO	Maximum Structural Cruising Speed is the speed that should not be exceeded except in smooth air and then only with caution.
Vs	Stalling Speed or the minimum steady flight speed at which the airplane is controllable.
Vso	Stalling Speed or the minimum steady flight speed at which the airplane is controllable in the landing configuration.
Vx	Best Angle-of-Climb Speed is the airspeed which delivers the greatest gain of altitude in the shortest possible horizontal distance.
Vy	Best Rate-of-Climb Speed is the airspeed which delivers the greatest gain in altitude in the shortest possible time.

(b) Meteorological Terminology

ISA	International Standard Atmosphere in which: The air is a dry perfect gas; The temperature at sea level is 15° Celsius (59° Fahrenheit); The pressure at sea level is 29.92 inches Hg (1013.2 mb); The temperature gradient from sea level to the altitude at which the temperature is -56.5°C (-69.7°F) is -0.00198C (-0.003564°F) per foot and zero above that altitude.
OAT	Outside Air Temperature is the free air static temperature, obtained either from inflight temperature indications or ground meteorological sources, adjusted for instrument error and compressibility effects.

Indicated Pressure Altitude	The number actually read from an altimeter when the barometric subscale has been set to 29.92 inches of mercury (1013.2 millibars).
Pressure Altitude	Altitude measured from standard sea-level pressure (29.92 in. Hg) by a pressure or barometric altimeter. It is the indicated pressure altitude corrected for position and instrument error. In this handbook, altimeter instrument errors are assumed to be zero.
Station Pressure	Actual atmospheric pressure at field elevation.
Wind	The wind velocities recorded as variables on the charts of this handbook are to be understood as the headwind or tailwind components of the reported winds.

(c) Power Terminology

Takeoff Power	Maximum power permissible for takeoff.
Maximum Continuous Power	Maximum power permissible continuously during flight.

(d) Engine Instruments

EGT Gauge	Exhaust Gas Temperature Gauge

(e) Airplane Performance and Flight Planning Terminology

Climb Gradient	The demonstrated ratio of the change in height during a portion of a climb, to the horizontal distance traversed in the same time interval.
Demonstrated Crosswind Velocity (Demo. X-Wind)	The demonstrated crosswind velocity is the velocity of the crosswind component for which adequate control of the airplane during takeoff and landing was actually demonstrated during certification tests.
Accelerate-Stop Distance	The distance required to accelerate an airplane to a specified speed and, assuming failure of an engine at the instant that speed is attained, to bring the airplane to a stop.
Route Segment	A part of a route. Each end of that part is identified by: (1) a geographical location; or (2) a point at which a definite radio fix can be established.

(f) Weight and Balance Terminology

Reference Datum	An imaginary vertical plane from which all horizontal distances are measured for balance purposes.
Station	A location along the airplane fuselage usually given in terms of distance from the reference datum.
Arm	The horizontal distance from the reference datum to the center of gravity (C.G.) of an item.

Moment	The product of the weight of an item multiplied by its arm. (Moment divided by a constant is used to simplify balance calculations by reducing the number of digits.)
Center of Gravity (C.G.)	The point at which an airplane would balance if suspended. Its distance from the reference datum is found by dividing the total moment by the total weight of the airplane.
C.G. Arm	The arm obtained by adding the airplane's individual moments and dividing the sum by the total weight.
C.G. Limits	The extreme center of gravity locations within which the airplane must be operated at a given weight.
Usable Fuel	Fuel available for flight planning.
Unusable Fuel	Fuel remaining after a runout test has been completed in accordance with governmental regulations.
Standard Empty Weight	Weight of a standard airplane including unusable fuel, full operating fluids and full oil.
Basic Empty Weight	Standard empty weight plus optional equipment.
Payload	Weight of occupants, cargo and baggage.
Useful Load	Difference between takeoff weight, or ramp weight is applicable, and basic empty weight.
Maximum Ramp Weight	Maximum weight approved for ground maneuver. (It includes weight of start, taxi and run up fuel.)

Maximum Takeoff Weight	Maximum weight approved for the start of the takeoff run.
Maximum Landing Weight	Maximum weight approved for the landing touchdown.
Maximum Zero Fuel Weight	Maximum weight exclusive of usable fuel.

TABLE OF CONTENTS

SECTION 2

LIMITATIONS

Paragraph No.		Page No.
2.1	General	2-1
2.3	Airspeed Limitations	2-1
2.5	Airspeed Indicator Markings	2-2
2.7	Power Plant Limitations	2-3
2.9	Power Plant Instrument Markings	2-4
2.11	Weight Limits	2-4
2.13	Center of Gravity Limits	2-5
2.15	Maneuver Limits	2-6
2.17	Flight Load Factors	2-6
2.19	Types of Operations	2-6
2.21	Fuel Limitations	2-6
2.23	Noise Level	2-7
2.25	Placards	2-8

SECTION 2

LIMITATIONS

2.1 GENERAL

This section provides the "FAA Approved" operating limitations, instrument markings, color coding and basic placards necessary for operation of the airplane and its systems.

This airplane must be operated as a normal or utility category airplane in compliance with the operating limitations stated in the form of placards and markings and those given in this section and this complete handbook.

Limitations associated with those optional systems and equipment which require handbook supplements can be found in Section 9 (Supplements).

2.3 AIRSPEED LIMITATIONS

SPEED	KIAS	KCAS
Never Exceed Speed (VNE) - Do not exceed this speed in any operation.	154	148
Maximum Structural Cruising Speed (VNO) - Do not exceed this speed except in smooth air and then only with caution.	125	121

SPEED	KIAS	KCAS
Design Maneuvering Speed (V_A) - Do not make full or abrupt control movements above this speed.		
At 2550 lbs. G.W.	113	111
At 1634 lbs. G.W.	89	89

CAUTION

Maneuvering speed decreases at lighter weight as the effects of aerodynamic forces become more pronounced. Linear interpolation may be used for intermediate gross weights. Maneuvering speed should not be exceeded while operating in rough air.

Maximum Flaps Extended Speed (V_{FE}) - Do not exceed this speed with the flaps extended.	102	100

2.5 AIRSPEED INDICATOR MARKINGS

MARKING	IAS
Red Radial Line (Never Exceed)	154 KTS
Yellow Arc (Caution Range - Smooth Air Only)	125 KTS to 154 KTS
Green Arc (Normal Operating Range)	55 KTS to 125 KTS
White Arc (Flap Down)	49 KTS to 102 KTS

2.7 POWER PLANT LIMITATIONS

(a) Number of Engines	1
(b) Engine Manufacturer	Lycoming
(c) Engine Model No.	O-360-A4M or O-360-A4A with carburetor setting 10-3878
(d) Engine Operating Limits	
(1) Takeoff Power - 5 Minute limit (BHP)	180
(2) Takeoff Engine Speed - 5 Minute Limit (RPM)	2700
(3) Maximum Continuous Power (BHP)	178
(4) Maximum Continuous Engine Speed (RPM)	2650
(5) Maximum Oil Temperature	245° F
(6) Oil Pressure	
Minimum (red line)	25 PSI
Maximum (red line)	90 or 100 PSI
(7) Fuel Pressure	
Minimum (red line)	0.5 PSI
Maximum (red line)	8 PSI
(8) Fuel (AVGAS ONLY) (minimum grade)	100 or 100LL Aviation Grade
(9) Number of Propellers	1
(10) Propeller Manufacturer	Sensenich
(11) Propeller Model	76EM8S5-0-62
(12) Propeller Diameter	
Minimum	76 IN.
Maximum	76 IN.
(13) Propeller Tolerance (static RPM at maximum permissible throttle setting)	Not above 2375 RPM Not below 2275 RPM
No additional tolerance permitted.	

2.9 POWER PLANT INSTRUMENT MARKINGS

(a)	Tachometer	
	Green Arc (Normal Operating Range)	500 to 2650 RPM
	Yellow Arc (5 Minute Limit)	2650 to 2700 RPM
	Red Line (Takeoff Power)	2700 RPM
(b)	Oil Temperature	
	Green Arc (Normal Operating Range)	75°to 245°F
	Red Line (Maximum)	245°F
(c)	Oil Pressure	
	Green Arc (Normal Operating Range)	60 PSI to 90 PSI
	Yellow Arc (Caution Range) (Idle)	25 PSI to 60 PSI
	Yellow Arc (Ground Warm-Up)	None or 90 PSI to 100 PSI
	Red Line (Minimum)	25 PSI
	Red Line (Maximum)	90 or 100 PSI
(d)	Fuel Pressure	
	Green Arc (Normal Operating Range)	0.5 PSI to 8 PSI
	Red Line (Minimum)	0.5 PSI
	Red Line (Maximum)	8 PSI

2.11 WEIGHT LIMITS

		Normal	Utility
(a)	Maximum Ramp (lbs.)	2558	2138
(b)	Maximum Weight (lbs.)	2550	2130
(c)	Maximum Baggage (lbs.)	200	0

NOTE

Refer to Section 5 (Performance) for maximum weight as limited by performance.

2.13 CENTER OF GRAVITY LIMITS

(a) Normal Category

Weight Pounds	Forward Limit Inches Aft of Datum	Rearward Limit Inches Aft of Datum
2550	88.6	93.0
2050 (and less)	82.0	93.0

(b) Utility Category

Weight Pounds	Forward Limit Inches Aft of Datum	Rearward Limit Inches Aft of Datum
2130	83.0	93.0
2050 (and less)	82.0	93.0

NOTES

Straight line variation between points given.

The datum used is 78.4 inches ahead of the wing leading edge at the inboard intersection of the straight and tapered section.

It is the responsibility of the airplane owner and the pilot to insure that the airplane is properly loaded. See Section 6 (Weight and Balance) for proper loading instructions.

2.15 MANEUVER LIMITS

(a) Normal Category - All acrobatic maneuvers including spins prohibited.
(b) Utility Category - Approved maneuvers for bank angles exceeding 60°.

	Entry Speed
Steep Turns	113 KIAS
Lazy Eights	113 KIAS
Chandelles	113 KIAS

2.17 FLIGHT LOAD FACTORS

	Normal	Utility
(a) Positive Load Factor (Maximum)	3.8 G	4.4 G
(b) Negative Load Factor (Maximum)	No inverted maneuvers approved	

2.19 TYPES OF OPERATION

The airplane is approved for the following operations when equipped in accordance with FAR 91 or FAR 135.

(a) Day V.F.R.
(b) Night V.F.R.
(c) Day I.F.R.
(d) Night I.F.R.
(e) Non Icing

2.21 FUEL LIMITATIONS

(a) Total Capacity	50 U.S. GAL.
(b) Unusable Fuel The unusable fuel for this airplane has been determined as 1.0 gallon in each wing in critical flight attitudes.	2 U.S. GAL.
(c) Usable Fuel The usable fuel in this airplane has been determined as 24.0 gallons in each wing.	48 U.S. GAL.

2.23 NOISE LEVEL

The noise level of this aircraft is 73.9 d B(A).

No determination has been made by the Federal Aviation Administration that the noise levels of this airplane are or should be acceptable or unacceptable for operation at, into, or out of, any airport.

The above statement not withstanding the noise level stated above has been verified by and approved by the Federal Aviation Administration in noise level test flights conducted in accordance with FAR 36, Noise Standards - Aircraft Type and Airworthiness Certification. This aircraft model is in compliance with all FAR 36 noise standards applicable to this type.

2.25 PLACARDS

In full view of the pilot:

"THIS AIRPLANE MUST BE OPERATED AS A NORMAL OR UTILITY CATEGORY AIRPLANE IN COMPLIANCE WITH THE OPERATING LIMITATIONS STATED IN THE FORM OF PLACARDS, MARKINGS AND MANUALS.

ALL MARKINGS AND PLACARDS ON THIS AIRPLANE APPLY TO ITS OPERATION AS A UTILITY CATEGORY AIRPLANE. FOR NORMAL AND UTILITY CATEGORY OPERATION REFER TO THE PILOT'S OPERATING HANDBOOK.

NO ACROBATIC MANEUVERS ARE APPROVED FOR NORMAL CATEGORY OPERATIONS. SPINS ARE PROHIBITED FOR NORMAL AND UTILITY CATEGORY."

In full view of the pilot:

TAKEOFF CHECK LIST

Fuel on proper tank	Seat backs erect
Electric fuel pump on	Fasten belts/harness
Engine gauges checked	Trim tab - set
Flaps - set	Controls- free
Carb. heat off	Door - latched
Mixture set	Air Conditioner off
Primer locked	

LANDING CHECK LIST

Fuel on proper tank	Flaps - set
Mixture rich	Fasten belts/harness
Electric fuel pump on	Air Conditioner off
Seat backs erect	

The "AIR COND OFF" item in the above takeoff and landing check lists is mandatory for air conditioned aircraft only.

In full view of the pilot, in the area of the air conditioner control panel when the air conditioner is installed:

"WARNING — AIR CONDITIONER MUST BE OFF TO INSURE NORMAL TAKEOFF CLIMB PERFORMANCE."

Adjacent to upper door latch:

"ENGAGE LATCH BEFORE FLIGHT."

On inside of the baggage compartment door.

"BAGGAGE MAXIMUM 200 LBS."
"UTILITY CATEGORY OPERATION - NO BAGGAGE OR AFT PASSENGERS ALLOWED. NORMAL CATEGORY OPERATION - SEE PILOT'S OPERATING HANDBOOK WEIGHT AND BALANCE SECTION FOR BAGGAGE AND AFT PASSENGER LIMITATIONS."

In full view of the pilot:

"V_A = 113 KIAS AT 2550# (SEE P.O.H.)"

"DEMO. X-WIND 17 KTS."

In full view of the pilot:

"OIL COOLER WINTERIZATION PLATE TO BE REMOVED WHEN AMBIENT TEMPERATURE EXCEEDS 50°F."

In full view of the pilot:

"UTILITY CATEGORY OPERATION ONLY."
(1) NO AFT PASSENGERS ALLOWED.
(2) ACROBATIC MANEUVERS ARE LIMITED TO THE FOLLOWING:

	ENTRY SPEED
SPINS PROHIBITED	—
STEEP TURNS	143 KIAS
LAZY EIGHTS	113 KIAS
CHANDELLES	113 KIAS

In full view of the pilot:

"WARNING — TURN OFF STROBE LIGHTS WHEN IN CLOSE PROXIMITY TO GROUND OR DURING FLIGHT THROUGH CLOUD, FOG OR HAZE."

On tachometer face:

"AFTER 5 MIN: REDUCE POWER TO 2650 RPM."

Adjacent to the fuel filler caps:

FUEL - 100 or 100LL AVIATION GRADE.
or
FUEL - 100-130 AVIATION GRADE MIN.
USABLE CAPACITY 24 GAL.
USABLE CAPACITY TO BOTTOM OF FILLER NECK INDICATOR 17 GAL.

Adjacent to the filler caps (serial numbers 28-8390036 and up):



TABLE OF CONTENTS

SECTION 3

EMERGENCY PROCEDURES

Paragraph No.		Page No.
3.1	General	3-1
3.3	Emergency Procedures Checklist	3-3
	Engine Fire During Start	3-3
	Engine Power Loss During Takeoff	3-3
	Engine Power Loss In Flight	3-4
	Power Off Landing	3-4
	Fire In Flight	3-5
	Loss of Oil Pressure	3-5
	Loss of Fuel Pressure	3-5
	High Oil Temperature	3-5
	Electrical Failures	3-6
	Electrical Overload (Interlocked Battery and Alternator Switch)	3-6
	Electrical Overload (Separate Battery and Alternator Switch)	3-7
	Spin Recovery	3-7
	Open Door	3-8
	Carburetor Icing	3-8
	Engine Roughness	3-8
3.5	Amplified Emergency Procedures (General)	3-9
3.7	Engine Fire During Start	3-9
3.9	Engine Power Loss During Takeoff	3-9
3.11	Engine Power Loss In Flight	3-10
3.13	Power Off Landing	3-11
3.15	Fire In Flight	3-11
3.17	Loss of Oil Pressure	3-12
3.19	Loss of Fuel Pressure	3-13
3.21	High Oil Temperature	3-13
3.23	Electrical Failures	3-13

TABLE OF CONTENTS (cont)

SECTION 3 (cont)

Paragraph No.		Page No.
3.24	Electrical Overload	3-14
3.25	Spin Recovery	3-15
3.27	Open Door	3-15
3.29	Carburetor Icing	3-16
3.31	Engine Roughness	3-16

SECTION 3

EMERGENCY PROCEDURES

3.1 GENERAL

The recommended procedures for coping with various types of emergencies and critical situations are provided by this section. All of required (FAA regulations) emergency procedures and those necessary for the operation of the airplane as determined by the operating and design features of the airplane are presented.

Emergency procedures associated with those optional systems and equipment which require handbook supplements are provided in Section 9 (Supplements).

The first portion of this section consists of an abbreviated emergency check list which supplies an action sequence for critical situations with little emphasis on the operation of systems.

The remainder of the section is devoted to amplified emergency procedures containing additional information to provide the pilot with a more complete understanding of the procedures.

These procedures are suggested as a course of action for coping with the particular condition described, but are not a substitute for sound judgment and common sense. Pilots should familiarize themselves with the procedures given in this section and be prepared to take appropriate action should an emergency arise.

Most basic emergency procedures, such as power off landings, are a normal part of pilot training. Although these emergencies are discussed here, this information is not intended to replace such training, but only to provide a source of reference and review, and to provide information on procedures which are not the same for all aircraft. It is suggested that the pilot review standard emergency procedures periodically to remain proficient in them.

THIS PAGE INTENTIONALLY LEFT BLANK

3.3 EMERGENCY PROCEDURES CHECK LIST

ENGINE FIRE DURING START

Starter ..... crank engine
Mixture ..... idle cut-off
Throttle ..... open
Electric fuel pump ..... OFF
Fuel selector ..... OFF
Abandon if fire continues.

ENGINE POWER LOSS DURING TAKEOFF

If sufficient runway remains for a normal landing, land straight ahead.

If insufficient runway remains:
Maintain safe airspeed.
Make only shallow turn to avoid obstructions.
Flaps as situation requires.

If sufficient altitude has been gained to attempt a restart:
Maintain safe airspeed.
Fuel selector ..... switch to tank containing fuel
Electric fuel pump ..... check ON
Mixture ..... check RICH
Carburetor heat ..... ON
Primer ..... locked
If power is not regained, proceed with power off landing.

ENGINE POWER LOSS IN FLIGHT

Fuel selector ..... switch to tank containing fuel
Electric fuel pump ..... ON
Mixture ..... RICH
Carburetor heat ..... ON
Engine gauges ..... check for indication of cause of power loss
Primer ..... check locked
If no fuel pressure is indicated, check tank selector position to be sure it is on a tank containing fuel.

When power is restored:
Carburetor heat ..... OFF
Electric fuel pump ..... OFF
If power is not restored prepare for power off landing.
Trim for 76 KIAS.

POWER OFF LANDING

Locate suitable field.
Establish spiral pattern.
1000 ft. above field at downwind position for normal landing approach.
When field can easily be reached slow to 66 KIAS for shortest landing.

Touchdowns should normally be made at lowest possible airspeed with full flaps.

When committed to landing:
Ignition ..... OFF
Master switch ..... OFF
Fuel selector ..... OFF
Mixture ..... idle cut-off
Seat belt and harness ..... tight

FIRE IN FLIGHT

Source of fire ..... check

Electrical fire (smoke in cabin):
Master switch ..... OFF
Vents ..... open
Cabin heat ..... OFF
Land as soon as practicable.

Engine fire:
Fuel selector ..... OFF
Throttle ..... CLOSED
Mixture ..... idle cut-off
Electric fuel pump ..... check OFF
Heater and defroster ..... OFF
Proceed with power off landing procedure.

LOSS OF OIL PRESSURE

Land as soon as possible and investigate cause.
Prepare for power off landing.

LOSS OF FUEL PRESSURE

Electric fuel pump ..... ON
Fuel selector ..... check on full tank

HIGH OIL TEMPERATURE

Land at nearest airport and investigate the problem.
Prepare for power off landing.

ELECTRICAL FAILURES

ALT annunciator light illuminated:
Ammeter ..... Check to verify inop. alt.

If ammeter shows zero:
ALT switch ..... OFF

Reduce electrical loads to minimum:
ALT circuit breaker ..... Check and reset as required
ALT switch ..... ON

If power not restored:
ALT switch ..... OFF

If alternator output cannot be restored, reduce electrical loads and land as soon as practical. The battery is the only remaining source of electrical power.

ELECTRICAL OVERLOAD (Alternator over 20 amps above known electrical load)

FOR AIRPLANES WITH INTERLOCKED BAT AND ALT SWITCH OPERATION

Electrical load ..... Reduce

If alternator loads are reduced:
ALT switch ..... OFF

Land as soon as practical. Battery is the only remaining source of power. Anticipate complete electrical failure.

ELECTRICAL OVERLOAD (Alternator over 20 amps above known electrical load)

FOR AIRPLANES WITH SEPARATE BAT AND ALT SWITCH OPERATION

ALT switch ..... ON
BAT switch ..... OFF

If alternator loads are reduced:
Electrical load ..... Reduce to Minimum

Land as soon as practical.

NOTE

Due to increased system voltage and radio frequency noise, operation with ALT switch ON and BAT switch OFF should be made only when required by an electrical system failure.

If alternator loads are not reduced:
ALT switch ..... OFF
BAT switch ..... As required

Land as soon as possible. Anticipate complete electrical failure.

SPIN RECOVERY

Throttle ..... idle
Ailerons ..... neutral
Rudder ..... full opposite to direction of rotation
Control wheel ..... full forward
Rudder ..... neutral (when rotation stops)
Control wheel ..... as required to smoothly regain level flight altitude

OPEN DOOR

If both upper and side latches are open, the door will trail slightly open and airspeeds will be reduced slightly.

To close the door in flight:
Slow airplane to 87 KIAS.
Cabin vents ..... close
Storm window ..... open

If upper latch is open ..... latch
If side latch is open ..... pull on armrest while moving latch handle to latched position

If both latches are open ..... latch side latch then top latch

CARBURETOR ICING

Carburetor heat ..... ON
Mixture ..... adjust for maximum smoothness

ENGINE ROUGHNESS

Carburetor heat ..... ON

If roughness continues after one min:
Carburetor heat ..... OFF
Mixture ..... adjust for maximum smoothness
Electric fuel pump ..... ON
Fuel selector ..... switch tanks
Engine gauges ..... check
Magneto switch ..... L then R then BOTH

If operation is satisfactory on either one, continue on that magneto at reduced power and full RICH mixture to first airport.

Prepare for power off landing.

3.5 AMPLIFIED EMERGENCY PROCEDURES (GENERAL)

The following paragraphs are presented to supply additional information for the purpose of providing the pilot with a more complete understanding of the recommended course of action and probable cause of an emergency situation.

3.7 ENGINE FIRE DURING START

Engine fires during start are usually the result of overpriming. The first attempt to extinguish the fire is to try to start the engine and draw the excess fuel back into the induction system.

If a fire is present before the engine has started, move the mixture control to idle cut-off, open the throttle and crank the engine. This is an attempt to draw the fire back into the engine.

If the engine has started, continue operating to try to pull the fire into the engine.

In either case (above), if fire continues more than a few seconds, the fire should be extinguished by the best available external means.

The fuel selector valves should be OFF and the mixture at idle cut-off if an external fire extinguishing method is to be used.

3.9 ENGINE POWER LOSS DURING TAKEOFF

The proper action to be taken if loss of power occurs during takeoff will depend on the circumstances of the particular situation.

If sufficient runway remains to complete a normal landing, land straight ahead.

If insufficient runway remains, maintain a safe airspeed and make only a shallow turn if necessary to avoid obstructions. Use of flaps depends on the circumstances. Normally, flaps should be fully extended for touchdown.

If sufficient altitude has been gained to attempt a restart, maintain a safe airspeed and switch the fuel selector to another tank containing fuel. Check the electric fuel pump to insure that it is ON and that the mixture is RICH. The carburetor heat should be ON and the primer checked to insure that it is locked.

If engine failure was caused by fuel exhaustion, power will not be regained after switching fuel tanks until the empty fuel lines are filled. This may require up to ten seconds.

If power is not regained, proceed with the Power Off Landing procedure (refer to the emergency check list and Paragraph 3.13).

3.11 ENGINE POWER LOSS IN FLIGHT

Complete engine power loss is usually caused by fuel flow interruption and power will be restored shortly after fuel flow is restored. If power loss occurs at a low altitude, the first step is to prepare for an emergency landing (refer to Paragraph 3.13). An airspeed of at least 76 KIAS should be maintained.

If altitude permits, switch the fuel selector to another tank containing fuel and turn the electric fuel pump ON. Move the mixture control to RICH and the carburetor heat to ON. Check the engine gauges for an indication of the cause of the power loss. Check to insure the primer is locked. If no fuel pressure is indicated, check the tank selector position to be sure it is on a tank containing fuel.

When power is restored move the carburetor heat to the OFF position and turn OFF the electric fuel pump.

If the preceding steps do not restore power, prepare for an emergency landing.

If time permits, turn the ignition switch to L then to R then back to BOTH. Move the throttle and mixture control levers to different settings. This may restore power if the problem is too rich or too lean a mixture or if there is a partial fuel system restriction. Try other fuel tanks. Water in the fuel could take some time to be used up, and allowing the engine to windmill may restore power. If power loss is due to water, fuel pressure indications will be normal.

If engine failure was caused by fuel exhaustion, power will not be restored after switching fuel tanks until the empty fuel lines are filled. This may require up to ten seconds.

If power is not regained, proceed with the Power Off Landing procedure (refer to the emergency check list and Paragraph 3.13).

3.13 POWER OFF LANDING

If loss of power occurs at altitude, trim the aircraft for best gliding angle 76 KIAS (Air Cond. off) and look for a suitable field. If measures taken to restore power are not effective, and if time permits, check your charts for airports in the immediate vicinity; it may be possible to land at one if you have sufficient altitude. If possible, notify the FAA by radio of your difficulty and intentions. If another pilot or passenger is aboard, let him help.

When you have located a suitable field, establish a spiral pattern around this field. Try to be at 1000 feet above the field at the downwind position, to make a normal landing approach. When the field can easily be reached, slow to 66 KIAS with flaps down for the shortest landing. Excess altitude may be lost by widening your pattern, using flaps or slipping, or a combination of these.

Touchdown should normally be made at the lowest possible airspeed.

When committed to a landing, close the throttle control and shut OFF the master and ignition switches. Flaps may be used as desired. Turn the fuel selector valve to OFF and move the mixture to idle cut-off. The seat belts and shoulder harness (if installed) should be tightened. Touchdown should be normally made at the lowest possible airspeed.

3.15 FIRE IN FLIGHT

The presence of fire is noted through smoke, smell and heat in the cabin. It is essential that the source of the fire be promptly identified through instrument readings, character of the smoke, or other indications since the action to be taken differs somewhat in each case.

Check for the source of the fire first.

If an electrical fire is indicated (smoke in the cabin), the master switch should be turned OFF. The cabin vents should be opened and the cabin heat turned OFF. A landing should be made as soon as possible.

If an engine fire is present, switch the fuel selector to OFF and close the throttle. The mixture should be at idle cut-off. Turn the electric fuel pump OFF. In all cases, the heater and defroster should be OFF. If radio communication is not required, select master switch OFF. Proceed with power off landing procedure.

NOTE

The possibility of an engine fire in flight is extremely remote. The procedure given is general and pilot judgment should be the determining factor for action in such an emergency.

3.17 LOSS OF OIL PRESSURE

Loss of oil pressure may be either partial or complete. A partial loss of oil pressure usually indicates a malfunction in the oil pressure regulating system, and a landing should be made as soon as possible to investigate the cause and prevent engine damage.

A complete loss of oil pressure indication may signify oil exhaustion or may be the result of a faulty gauge. In either case, proceed toward the nearest airport, and be prepared for a forced landing. If the problem is not a pressure gauge malfunction, the engine may stop suddenly. Maintain altitude until such time as a dead stick landing can be accomplished. Don't change power settings unnecessarily, as this may hasten complete power loss.

Depending on the circumstances, it may be advisable to make an off airport landing while power is still available, particularly if other indications of actual oil pressure loss, such as sudden increases in temperatures, or oil smoke, are apparent, and an airport is not close.

If engine stoppage occurs, proceed with Power Off Landing.

3.19 LOSS OF FUEL PRESSURE

If loss of fuel pressure occurs, turn ON the electric fuel pump and check that the fuel selector is on a full tank.

If the problem is not an empty tank, land as soon as practical and have the engine driven fuel pump and fuel system checked.

3.21 HIGH OIL TEMPERATURE

An abnormally high oil temperature indication may be caused by a low oil level, an obstruction in the oil cooler, damaged or improper baffle seals, a defective gauge, or other causes. Land as soon as practical at an appropriate airport and have the cause investigated.

A steady, rapid rise in oil temperature is a sign of trouble. Land at the nearest airport and let a mechanic investigate the problem. Watch the oil pressure gauge for an accompanying loss of pressure.

3.23 ELECTRICAL FAILURES

Loss of alternator output is detected through zero reading on the ammeter. Before executing the following procedure, insure that the reading is zero and not merely low by actuating an electrically powered device, such as the landing light. If no increase in the ammeter reading is noted, alternator failure can be assumed.

The electrical load should be reduced as much as possible. Check the alternator circuit breakers for a popped circuit.

The next step is to attempt to reset the overvoltage relay. This is accomplished by moving the ALT switch to OFF for one second and then to ON. If the trouble was caused by a momentary overvoltage condition (16.5 volts and up) this procedure should return the ammeter to a normal reading.

If the ammeter continues to indicate "0" output, or if the alternator will not remain reset, turn off the ALT switch, maintain minimum electrical load and land as soon as practical. All electrical load is being supplied by the battery.

3.24 ELECTRICAL OVERLOAD (Alternator over 20 amps above known electrical load)

If abnormally high alternator output is observed (more than 20 amps above known electrical load for the operating conditions) it may be caused by a low battery, a battery fault or other abnormal electrical load. If the cause is a low battery, the indication should begin to decrease toward normal within 5 minutes. If the overload condition persists attempt to reduce the load by turning off non-essential equipment. For airplanes with interlocked BAT and ALT switch operation, when the electrical load cannot be reduced turn the ALT switch OFF and land as soon as practical. The battery is the only remaining source of electrical power. Also anticipate complete electrical failure.

For airplanes with separate BAT and ALT switch operations, turn the BAT switch OFF and the ammeter should decrease. Turn the BAT switch ON and continue to monitor the ammeter. If the alternator output does not decrease within 5 minutes, turn the BAT switch OFF and land as soon as practical. All electrical loads are being supplied by the alternator.

NOTE

Due to higher voltage and radio frequency noise, operation with the ALT switch ON and the BAT switch OFF should be made only when required by an electrical failure.

3.25 SPIN RECOVERY

Intentional spins are prohibited in this airplane. If a spin is inadvertently entered, immediately move the throttle to idle and the ailerons to neutral.

Full rudder should then be applied opposite to the direction of rotation followed by control wheel full forward. When the rotation stops, neutralize the rudder and ease back on the control wheel as required to smoothly regain a level flight attitude.

3.27 OPEN DOOR

The cabin door is double latched, so the chances of its springing open in flight at both the top and side are remote. However, should you forget the upper latch, or not fully engage the side latch, the door may spring partially open. This will usually happen at takeoff or soon afterward. A partially open door will not affect normal flight characteristics, and a normal landing can be made with the door open.

If both upper and side latches are open, the door will trail slightly open, and airspeed will be reduced slightly.

To close the door in flight, slow the airplane to 87 KIAS, close the cabin vents and open the storm window. If the top latch is open, latch it. If the side latch is open, pull on the armrest while moving the latch handle to the latched position. If both latches are open, close the side latch then the top latch.

3.29 CARBURETOR ICING

Under certain moist atmospheric conditions at temperatures of -5°C to 20°C, it is possible for ice to form in the induction system, even in summer weather. This is due to the high air velocity through the carburetor venturi and the absorption of heat from this air by vaporization of the fuel.

To avoid this, carburetor preheat is provided to replace the heat lost by vaporization. Carburetor heat should be full on when carburetor ice is encountered. Adjust mixture for maximum smoothness.

3.31 ENGINE ROUGHNESS

Engine roughness is usually due to carburetor icing which is indicated by a drop in RPM, and may be accompanied by a slight loss of airspeed or altitude. If too much ice is allowed to accumulate, restoration of full power may not be possible; therefore, prompt action is required.

Turn carburetor heat on (See Note). RPM will decrease slightly and roughness will increase. Wait for a decrease in engine roughness or an increase in RPM, indicating ice removal. If no change in approximately one minute, return the carburetor heat to OFF.

If the engine is still rough, adjust the mixture for maximum smoothness. The engine will run rough if too rich or too lean. The electric fuel pump should be switched to ON and the fuel selector switched to the other tank to see if fuel contamination is the problem. Check the engine gauges for abnormal readings. If any gauge readings are abnormal, proceed accordingly. Move the magneto switch to L then to R, then back to BOTH. If operation is satisfactory on either magneto, proceed on that magneto at reduced power, with mixture full RICH, to a landing at the first available airport.

If roughness persists, prepare for a precautionary landing at pilot's discretion.

NOTE

Partial carburetor heat may be worse than no heat at all, since it may melt part of the ice, which will refreeze in the intake system. When using carburetor heat, therefore, always use full heat, and when ice is removed return the control to the full cold position.

TABLE OF CONTENTS

SECTION 4

NORMAL PROCEDURES

Paragraph No.		Page No.
4.1	General	4-1
4.3	Airspeeds for Safe Operations	4-1
4.5	Normal Procedures Checklist	4-3
	Preflight Check	4-3
	Before Starting Engine	4-4
	Starting Engine When Cold	4-4
	Starting Engine When Hot	4-5
	Starting Engine When Flooded	4-5
	Starting With External Power Source	4-5
	Warm-Up	4-6
	Taxiing	4-6
	Ground Check	4-6
	Before Takeoff	4-6
	Takeoff	4-7
	Climb	4-8
	Cruising	4-8
	Descent	4-8
	Approach and Landing	4-8
	Stopping Engine	4-9
	Parking	4-9
4.7	Amplified Normal Procedures (General)	4-10
4.9	Preflight Check	4-10
4.11	Before Starting Engine	4-12
4.13	Starting Engine	4-12
4.15	Warm-Up	4-14
4.17	Taxiing	4-14
4.19	Ground Check	4-15
4.21	Before Takeoff	4-16
4.23	Takeoff	4-17

TABLE OF CONTENTS (cont)

SECTION 4 (cont)

Paragraph No.		Page No.
4.25	Climb	4-17
4.27	Cruising	4-17
4.29	Descent	4-18
4.31	Approach and Landing	4-19
4.33	Stopping Engine	4-20
4.35	Parking	4-20
4.37	Stalls	4-21
4.39	Turbulent Air Operation	4-21
4.41	Weight and Balance	4-22

SECTION 4

NORMAL PROCEDURES

4.1 GENERAL

This section describes the recommended procedures for the conduct of normal operations for the Archer II. All of the required (FAA regulations) procedures and those necessary for operation of the airplane as determined by the operating and design features of the airplane are presented.

Normal procedures associated with those optional systems and equipment which require handbook supplements are provided by Section 9 (Supplements).

These procedures are provided to present a source of reference and review and to supply information on procedures which are not the same for all aircraft. Pilots should familiarize themselves with the procedures given in this section in order to become proficient in the normal operations of the airplane.

The first portion of this section consists of a short form check list which supplies an action sequence for normal operations with little emphasis on the operation of the systems.

The remainder of the section is devoted to amplified normal procedures which provide detailed information and explanations of the procedures and how to perform them. This portion of the section is not intended for use as an in-flight reference due to the lengthly explanations. The short form check list should be used for this purpose.

4.3 AIRSPEEDS FOR SAFE OPERATIONS

The following airspeeds are those which are significant to the safe operation of the airplane. These figures are for standard airplanes flown at gross weight under standard conditions at sea level.

Performance for a specific airplane may vary from published figures depending upon the equipment installed, the condition of the engine, airplane and equipment, atmospheric conditions and piloting technique.

(a)	Best Rate of Climb Speed	76 KIAS
(b)	Best Angle of Climb Speed	64 KIAS
(c)	Turbulent Air Operating Speed (See Subsection 2.3)	113 KIAS
(d)	Maximum Flap Speed	102 KIAS
(e)	Landing Final Approach Speed (Flaps 40°)	66 KIAS
(f)	Maximum Demonstrated Crosswind Velocity	17 KTS

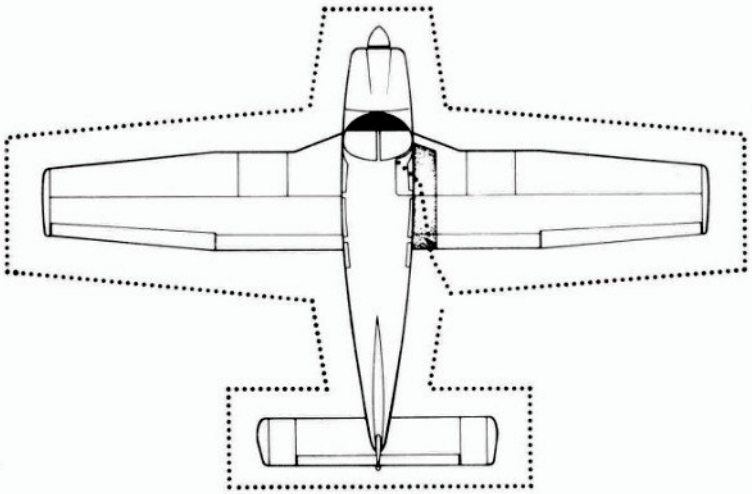

WALK-AROUND
Figure 4-1

4.5 NORMAL PROCEDURES CHECK LIST

PREFLIGHT CHECK

Control wheel ..... release belts
Avionics ..... OFF
Master switch ..... ON
Fuel quantity gauges ..... check
Master switch ..... OFF
Ignition ..... OFF
Exterior ..... check for damage
Control surfaces ..... check for interference - free of ice, snow, frost
Hinges ..... check for interference
Wings ..... free of ice, snow, frost
Stall warning ..... check
Fuel tanks ..... check supply visually - secure caps

Fuel tank sumps ..... drain and check for water sediment and proper fuel
Fuel vents ..... open
Main gear struts ..... proper inflation (4.50 in.)
Tires ..... check
Brake blocks ..... check
Pitot head ..... remove cover - holes clear
Windshield ..... clean
Propeller and spinner ..... check
Fuel and oil ..... check for leaks
Oil ..... check level
Dipstick ..... properly seated
Cowling ..... secure
Inspection covers ..... secure
Nose wheel tire ..... check
Nose gear strut ..... proper inflation (3.25 in.)
Air inlets ..... clear
Alternator belt ..... check tension
Tow bar and control locks ..... stow
Baggage ..... stowed properly - secure
Baggage door ..... close and secure
Fuel strainer ..... drain and check for water sediment and proper fuel
Primary flight controls ..... proper operation
Cabin door ..... close and secure
Required papers ..... on board
Seat belts and harness ..... fasten/adjust-check inertia reel

BEFORE STARTING ENGINE

Brakes ..... set
Carburetor heat ..... full COLD
Fuel selector ..... desired tank
Radios ..... OFF

STARTING ENGINE WHEN COLD

Throttle ..... 1/4" open
Master switch ..... ON
Electric fuel pump ..... ON
Mixture ..... full RICH

Starter ..... engage
Throttle ..... adjust
Oil pressure ..... check

If engine does not start within 10 sec. prime and repeat starting procedure.

STARTING ENGINE WHEN HOT

Throttle ..... 1/2" open
Master switch ..... ON
Electric fuel pump ..... ON
Mixture ..... full RICH
Starter ..... engage
Throttle ..... adjust
Oil pressure ..... check

STARTING ENGINE WHEN FLOODED

Throttle ..... open full
Master switch ..... ON
Electric fuel pump ..... OFF
Mixture ..... idle cut-off
Starter ..... engage
Mixture ..... advance
Throttle ..... retard
Oil pressure ..... check

STARTING WITH EXTERNAL POWER SOURCE

Master switch ..... OFF
All electrical equipment ..... OFF
Terminals ..... connect
External power plug ..... insert in fuselage

Proceed with normal start
Throttle ..... lowest possible RPM
External power plug ..... disconnect from fuselage
Master switch ..... ON - check ammeter
Oil pressure ..... check

WARM-UP

Throttle ..... 800 to 1200 RPM

TAXIING

Chocks ..... removed
Taxi area ..... clear
Throttle ..... apply slowly
Brakes ..... check
Steering ..... check

GROUND CHECK

Parking brake ..... set
Throttle ..... 2000 RPM
Magnetos ..... max. drop 175 RPM - max. diff. 50 RPM
Vacuum ..... 5.0" Hg. ± .1
Oil temp ..... check
Oil pressure ..... check
Air conditioner ..... check
Annunciator panel ..... press-to-test
Carburetor heat ..... check
Engine is warm for takeoff when throttle can be opened without engine faltering.
Electric fuel pump ..... OFF
Fuel pressure ..... check
Throttle ..... retard

BEFORE TAKEOFF

Master switch ..... ON
Flight instruments ..... check
Fuel selector ..... proper tank
Electric fuel pump ..... ON
Engine gauges ..... check
Carburetor heat ..... OFF
Seat backs ..... erect
Mixture ..... set
Primer ..... locked

Belts/harness ..... fastened/adjusted
Empty seats ..... seat belts snugly fastened
Flaps ..... set
Trim tab ..... set
Controls ..... free
Doors ..... latched
Air conditioner ..... OFF

TAKEOFF

NORMAL

Flaps ..... set
Tab ..... set
Accelerate to 52 to 65 KIAS
Control wheel ..... back pressure to rotate to climb attitude

SHORT FIELD, OBSTACLE CLEARANCE

Flaps ..... 25° (second notch)
Accelerate to 41 to 49 KIAS depending on aircraft weight.
Control wheel ..... back pressure to rotate to climb attitude
After breaking ground, accelerate to 45 to 54 KIAS depending on aircraft weight.
Accelerate to best flaps up angle of climb speed - 64 KIAS, slowly retract the flaps and climb past the obstacle.
Accelerate to best flaps up rate of climb speed - 76 KIAS.

SOFT FIELD

Flaps ..... 25° (second notch)
Accelerate to 41 to 49 KIAS depending on aircraft weight.
Control wheel ..... back pressure to rotate to climb attitude
After breaking ground, accelerate to 45 to 54 KIAS depending on aircraft weight.
Accelerate to best flaps up rate of climb speed 76 KIAS.
Flaps ..... retract slowly

CLIMB

Best rate (flaps up) ..... 76 KIAS
Best angle (flaps up) ..... 64 KIAS
En route ..... 87 KIAS
Electric fuel pump ..... OFF at desired altitude

CRUISING

Reference performance charts and Avco-Lycoming Operator's Manual.
Normal max. power 75%
Power ..... set per power table
Mixture ..... adjust

DESCENT

NORMAL

Throttle ..... 2500 rpm
Airspeed ..... 122 KIAS
Mixture ..... RICH
Carburetor heat ..... ON if required

POWER OFF

Carburetor heat ..... ON if required
Throttle ..... closed
Airspeed ..... as required
Mixture ..... as required
Power ..... verify with throttle every 30 seconds

APPROACH AND LANDING

Fuel selector ..... proper tank
Seat backs ..... erect
Belts/harness ..... fasten/adjust
Electric fuel pump ..... ON
Mixture ..... set

Flaps ..... set - 102 KIAS max
Air conditioner ..... OFF
Trim to 75 KIAS.
Final approach speed (flaps 40°) ..... 66 KIAS

STOPPING ENGINE

Flaps ..... retract
Electric fuel pump ..... OFF
Air conditioner ..... OFF
Radios ..... OFF
Throttle ..... full aft
Mixture ..... idle cut-off
Magnetos ..... OFF
Master switch ..... OFF

PARKING

Parking brake ..... set
Control wheel ..... secured with belts
Flaps ..... full up
Wheel chocks ..... in place
Tie downs ..... secure

4.7 AMPLIFIED NORMAL PROCEDURES (GENERAL)

The following paragraphs are provided to supply detailed information and explanations of the normal procedures necessary for the safe operation of the airplane.

4.9 PREFLIGHT CHECK

The airplane should be given a thorough preflight and walk-around check. The preflight should include a check of the airplane's operational status, computation of weight and C.G. limits, takeoff distance and in-flight performance. A weather briefing should be obtained for the intended flight path, and any other factors relating to a safe flight should be checked before takeoff.

CAUTION

The flap position should be noted before boarding the aircraft. The flaps must be placed in the UP position before they will lock and support weight on the step.

Upon entering the cockpit, release the seat belts securing the control wheel. Turn OFF all avionics equipment. Turn ON the master switch and check the fuel quantity gauges for sufficient fuel. After the fuel quantity check is made turn the master switch OFF and check that the ignition switch is OFF.

To begin the exterior walk-around, check for external damage and operational interference of the control surfaces or hinges. Insure that the wings and control surfaces are free of snow, ice, frost or any other foreign materials.

An operational check of the stall warning system should now be made. Turn the master switch ON. Lift the detector while checking to determine if the horn is actuated. The master switch should be returned to the OFF position after the check is complete.

A visual check of the fuel tank quantity should be performed. Remove the filler cap from each tank and visually check the supply and color. Be sure to secure the caps properly after the check is complete.

The fuel system sumps and strainer should be drained daily prior to the first flight and after refueling. Check for proper fuel and the accumulation of contaminants such as water or sediment. Each fuel tank is equipped with an individual quick drain located at the lower inboard rear corner of the tank. The fuel strainer is equipped with a quick drain located on the front lower corner of the firewall. Each of the fuel tank sumps should be drained first. Then the fuel strainer should be drained twice, once with the fuel selector valve on each tank. Each time fuel is drained, sufficient fuel should be allowed to flow to ensure removal of contaminants. This fuel should be collected in a suitable container, examined for contaminants, and then discarded.

CAUTION

When draining any amount of fuel, care should be taken to ensure that no fire hazard exists before starting the engine.

Each quick drain should be checked after closing it to make sure it has closed completely and is not leaking.

Check all of the fuel tank vents to make sure they are open.

Next, complete a check of the landing gear. Check the main gear shock struts for proper inflation. There should be 4.50 inches of strut exposure under a normal static load. The nose gear should be checked for 3.25 inches of strut exposure. Check all tires for cuts and wear and insure proper inflation. Make a visual check of the brake blocks for wear or damage.

Remove the cover from the pitot head on the underside of the left wing. Check the pitot head to make sure the holes are open and clear of obstructions.

Don't forget to clean and check the windshield.

The propeller and spinner should be checked for defects or nicks.

Lift the cowling and check for any obvious fuel or oil leaks. Check the oil level. Make sure that the dipstick has properly seated after checking. Secure the cowling and check the inspection covers.

Check the air inlets for foreign matter and the alternator belt for proper tension.

Stow the tow bar and check the baggage for proper storage and security. The baggage compartment doors should be closed and secure.

Upon entering the aircraft, ascertain that all primary flight controls operate properly. Close and secure the cabin door and check that all the required papers are in order and in the airplane.

Fasten and adjust the seat belts and shoulder harness and check the function of the inertia reel by pulling sharply on the strap. Fasten seat belts on empty seats.

NOTE

If the fixed shoulder harness (non-inertia reel type) is installed, it must be connected to the seat belt and adjusted to allow proper accessibility to all controls, including fuel selector, flaps, trim, etc., while maintaining adequate restraint for the occupant.

If the inertia reel type shoulder harness is installed, a pull test of its locking restraint feature should be performed.

4.11 BEFORE STARTING ENGINE

Before starting the engine the brakes should be set ON and the carburetor heat lever moved to the full COLD position. The fuel selector should then be moved to the desired tank. Check to make sure that all the radios are OFF.

4.13 STARTING ENGINE

(a) Starting Engine When Cold

Open the throttle lever approximately 1/4 inch. Turn ON the master switch and the electric fuel pump.

Move the mixture control to full RICH and engage the starter by rotating the magneto switch clockwise. When the engine fires, release the magneto switch, and move the throttle to the desired setting.

If the engine does not fire within five to ten seconds, disengage the starter, prime the engine and repeat the starting procedure.

(b) Starting Engine When Hot

Open the throttle approximately 1/2 inch. Turn ON the master switch and the electric fuel pump. Move the mixture control lever to full RICH and engage the starter by rotating the magneto switch clockwise. When the engine fires, release the magneto switch and move the throttle to the desired setting.

(c) Starting Engine When Flooded

The throttle lever should be full OPEN. Turn ON the master switch and turn OFF the electric fuel pump. Move the mixture control lever to idle cut-off and engage the starter by rotating the magneto switch clockwise. When the engine fires, release the magneto switch, advance the mixture and retard the throttle.

(d) Starting Engine With External Power Source

An optional feature called the Piper External Power (PEP) allows the operator to use an external battery to crank the engine without having to gain access to the airplane's battery.

Turn the master switch OFF and turn all electrical equipment OFF. Connect the RED lead of the PEP kit jumper cable to the POSITIVE (+) terminal of an external 12-volt battery and the BLACK lead to the NEGATIVE (-) terminal. Insert the plug of the jumper cable into the socket located on the fuselage. Note that when the plug is inserted, the electrical system is ON. Proceed with the normal starting technique.

After the engine has started, reduce power to the lowest possible RPM, to reduce sparking, and disconnect the jumper cable from the aircraft. Turn the master switch ON and check the alternator ammeter for an indication of output. DO NOT ATTEMPT FLIGHT IF THERE IS NO INDICATION OF ALTERNATOR OUTPUT.

NOTE

For all normal operations using the PEP jumper cables, the master switch should be OFF, but it is possible to use the ship's battery in parallel by turning the master switch ON. This will give longer cranking capabilities, but will not increase the amperage.

CAUTION

Care should be exercised because if the ship's battery has been depleted, the external power supply can be reduced to the level of the ship's battery. This can be tested by turning the master switch ON momentarily while the starter is engaged. If cranking speed increases, the ship's battery is at a higher level than the external power supply.

4.15 WARM-UP

Warm-up the engine at 800 to 1200 RPM for not more than two minutes in warm weather and four minutes in cold. Avoid prolonged idling at low RPM, as this practice may result in fouled spark plugs.

Takeoff may be made as soon as the ground check is completed, provided that the throttle may be opened fully without backfiring or skipping, and without a reduction in engine oil pressure.

Do not operate the engine at high RPM when running up or taxiing over ground containing loose stones, gravel or any loose material that may cause damage to the propeller blades.

4.17 TAXIING

Before attempting to taxi the airplane, ground personnel should be instructed and approved by a qualified person authorized by the owner. Ascertain that the propeller back blast and taxi areas are clear.

Power should be applied slowly to start the taxi roll. Taxi a few feet forward and apply the brakes to determine their effectiveness. While taxiing, make slight turns to ascertain the effectiveness of the steering.

Observe wing clearances when taxiing near buildings or other stationary objects. If possible, station an observer outside the airplane.

Avoid holes and ruts when taxiing over uneven ground.

Do not operate the engine at high RPM when running up or taxiing over ground containing loose stones, gravel or any loose material that may cause damage to the propeller blades.

4.19 GROUND CHECK

Set the parking brake.

The magnetos should be checked at 2000 RPM. Drop off on either magneto should not exceed 175 RPM and the difference between the magnetos should not exceed 50 RPM. Operation on one magneto should not exceed 10 seconds.

Check the vacuum gauge; the indicator should read 5.0" ± .1" Hg at 2000 RPM.

Check the annunciator panel lights with the press-to-test button. Also check the air conditioner.

Carburetor heat should also be checked prior to takeff to be sure the control is operating properly and to clear any ice which may have formed during taxiing. Avoid prolonged ground operation with carburetor heat "ON" as the air is unfiltered.

The electric fuel pump should be turned OFF after starting or during warm-up to make sure that the engine driven pump is operating. Prior to takeoff the electric pump should be turned ON again to prevent loss of power during takeoff should the engine driven pump fail. Check both oil temperature and oil pressure. The temperature may be low for some time if the engine is being run for the first time of the day. The engine is warm enough for takeoff when the throttle can be opened without the engine faltering.

4.21 BEFORE TAKEOFF

All aspects of each particular takeoff should be considered prior to executing the takeoff procedure.

Turn ON the master switch and check and set all of the flight instruments as required. Check the fuel selector to make sure it is on the proper tank (fullest). Turn ON the electric fuel pump and check the engine gauges. The carburetor heat should be in the OFF position.

All seat backs should be erect.

The mixture should be set and the primer checked to insure that it is locked. The seat belts and shoulder harness should be fastened and adjusted. Fasten the seat belts snugly around the empty seats.

NOTE

If the fixed shoulder harness (non-inertia reel type) is installed, it must be connected to the seat belt and adjusted to allow proper accessibility to all controls, including fuel selector, flaps, trim, etc., while maintaining adequate restraint for the occupant.

If the inertia reel type shoulder harness is installed, a pull test of its locking restraint feature should be performed.

Exercise and set the flaps and trim tab. Insure proper flight control movement and response.

All doors should be properly secured and latched.

On air conditioned models, the air conditioner must be OFF to insure normal takeoff performance.

4.23 TAKEOFF

The normal takeoff technique is conventional for the Archer II. The tab should be set slightly aft of neutral, with the exact setting determined by the loading of the airplane. Allow the airplane to accelerate to 48 to 53 KIAS depending on the weight of the aircraft and ease back on the control wheel to rotate to climb attitude.

The procedure used for a short field takeoff with an obstacle clearance or a soft field takeoff differs slightly from the normal technique. The flaps should be lowered to 25° (second notch). Allow the aircraft to accelerate to 41 to 49 KIAS depending on the aircraft weight and rotate the aircraft to climb attitude. After breaking ground, accelerate to 45 to 54 KIAS, depending on aircraft weight. Continue to climb while accelerating to the flaps-up rate of climb speed, 76 KIAS if no obstacle is present or 64 KIAS if obstacle clearance is a consideration. Slowly retract the flaps while climbing out.

4.25 CLIMB

The best rate of climb at gross weight will be obtained at 76 KIAS. The best angle of climb may be obtained at 64 KIAS. At lighter than gross weight these speeds are reduced somewhat. For climbing en route, a speed of 87 KIAS is recommended. This will produce better forward speed and increased visibility over the nose during the climb.

When reaching the desired altitude, the electric fuel pump may be turned off.

4.27 CRUISING

The cruising speed of the Archer II is determined by many factors, including power setting, altitude, temperature, loading and equipment installed in the airplane.

The normal maximum cruising power is 75% of the rated horsepower of the engine. Airspeeds which may be obtained at various altitudes and power settings can be determined from the performance graphs provided by Section 5.

Use of the mixture control in cruising flight reduces fuel consumption significantly, especially at higher altitudes. The mixture should be leaned during cruising operation above 5000 ft. altitude and at pilot's discretion at lower altitudes when 75% power or less is being used. If any doubt exists as to the amount of power being used, the mixture should be in the full RICH position for all operations under 5000 feet.

To lean the mixture, disengage the lock and pull the mixture control until the engine becomes rough, indicating that the lean mixture limit has been reached in the leaner cylinders. Then enrich the mixture by pushing the control towards the instrument panel until engine operation becomes smooth.

If the airplane is equipped with the optional exhaust gas temperature (EGT) gauge, a more accurate means of leaning is available to the pilot. Best economy mixture is obtained by moving the mixture control aft until peak EGT is reached. Best power mixture is obtained by leaning to peak EGT and then enrichening until the EGT is 100° F. rich of the peak value. Under some conditions of altitude and throttle position, the engine may exhibit roughness before peak EGT is reached. If this occurs, the EGT corresponding to the onset of engine roughness should be used as the peak reference value.

Always remember that the electric fuel pump should be turned ON before switching tanks, and should be left on for a short period thereafter. In order to keep the airplane in best lateral trim during cruising flight the fuel should be used alternately from each tank. It is recommended that one tank be used for one hour after takeoff, then the other tank be used for two hours; then return to the first tank, which will have approximately one and one half hours of fuel remaining if the tanks were full at takeoff. The second tank will contain approximately one half hour of fuel. Do not run tanks completely dry in flight. The electric fuel pump should be normally OFF so that any malfunction of the engine driven fuel pump is immediately apparent. If signs of fuel starvation should occur at any time during flight, fuel exhaustion should be suspected, at which time the fuel selector should be immediately positioned to the other tank and the electric fuel pump switched to the ON position.

4.29 DESCENT

NORMAL

To achieve the performance on Figure 5-29 the power on descent must be used. The throttle should be set for 2500 RPM, mixture full rich and maintain an airspeed of 122 KIAS. In case carburetor ice is encountered apply full carburetor heat.

POWER OFF

If a prolonged power off descent is to be made, apply full carburetor heat prior to power reduction if icing conditions are suspected. Throttle should be retarded and mixture control leaned as required. Power response should be verified approximately every 30 seconds by partially opening and then closing the throttle (clearing the engine). When leveling off enrichen mixture, set power as required and select carburetor heat off unless carburetor icing conditions are suspected.

4.31 APPROACH AND LANDING

Check to insure the fuel selector is on the proper (fullest) tank and that the seat backs are erect. The seat belts and shoulder harness should be fastened and adjusted and the inertia reel checked.

NOTE

If the fixed shoulder harness (non-inertia reel type) is installed, it must be connected to the seat belt and adjusted to allow proper accessibility to all controls, including fuel selector, flaps, trim, etc., while maintaining adequate restraint for the occupant.

If the inertia reel type shoulder harness is installed, a pull test of its locking restraint feature should be performed.

Turn ON the electric fuel pump and turn OFF the air conditioner. The mixture should be set in the full RICH position.

The airplane should be trimmed to an initial approach speed of about 75 KIAS with a final approach speed of 66 KIAS with flaps extended. The flaps can be lowered at speeds up to 102 KIAS, if desired.

The mixture control should be kept in full RICH position to insure maximum acceleration if it should be necessary to open the throttle again. Carburetor heat should not be applied unless there is an indication of carburetor icing, since the use of carburetor heat causes a reduction in power which may be critical in case of a go-around. Full throttle operation with carburetor heat on can cause detonation.

The amount of flap used during landings and the speed of the aircraft at contact with the runway should be varied according to the landing surface and conditions of wind and airplane loading. It is generally good practice to contact the ground at the minimum possible safe speed consistent with existing conditions.

Normally, the best technique for short and slow landings is to use full flap and enough power to maintain the desired airspeed and approach flight path. Mixture should be full RICH, fuel on the fullest tank, and electric fuel pump ON. Reduce the speed during the flareout and contact the ground close to the stalling speed. After ground contact hold the nose wheel off as long as possible. As the airplane slows down, gently lower the nose and apply the brakes. Braking is most effective when flaps are raised and back pressure is applied to the control wheel, putting most of the aircraft weight on the main wheels. In high wind conditions, particularly in strong crosswinds, it may be desirable to approach the ground at higher than normal speeds with partial or no flaps.

4.33 STOPPING ENGINE

At the pilot's discretion, the flaps should be raised and the electric fuel pump turned OFF.

NOTE

The flaps must be placed in the UP position for the flap step to support weight. Passengers should be cautioned accordingly.

The air conditioner and radios should be turned OFF, and the engine stopped by disengaging the mixture control lock and pulling the mixture control back to idle cut-off. The throttle should be left full aft to avoid engine vibration while stopping. Then the magneto and master switches must be turned OFF.

4.35 PARKING

If necessary, the airplane should be moved on the ground with the aid of the nose wheel tow bar provided with each airplane and secured behind the rear seats. The aileron and stabilator controls should be secured by looping the safety belt through the control wheel and pulling it snug. The flaps are locked when in the UP position and should be left retracted.

Tie downs can be secured to rings provided under each wing and to the tail skid. The rudder is held in position by its connections to the nose wheel steering and normally does not have to be secured.

4.37 STALLS

The stall characteristics of the Archer II are conventional. An approaching stall is indicated by a stall warning horn which is activated between five and ten knots above stall speed. Mild airframe buffeting and gentle pitching may also precede the stall.

The gross weight stalling speed of the Archer II with power off and full flaps is 49 KIAS. With the flaps up this speed is increased 6 KTS. Loss of altitude during stalls varies from 100 to 350 feet, depending on configuration and power.

NOTE

The stall warning system is inoperative with the master switch OFF.

During preflight, the stall warning system should be checked by turning the master switch ON, lifting the detector and checking to determine if the horn is actuated. The master switch should be returned to the OFF position after the check is complete.

4.39 TURBULENT AIR OPERATION

In keeping with good operating practice used in all aircraft, it is recommended that when turbulent air is encountered or expected, the airspeed be reduced to maneuvering speed to reduce the structural loads caused by gusts and to allow for inadvertent speed build-ups which may occur as a result of the turbulence or of distractions caused by the conditions. (See Subsection 2.3)

4.41 WEIGHT AND BALANCE

It is the responsibility of the owner and pilot to determine that the airplane remains within the allowable weight vs. center of gravity envelope while in flight.

For weight and balance data, refer to Section 6 (Weight and Balance).

TABLE OF CONTENTS

SECTION 5

PERFORMANCE

Paragraph No.		Page No.
5.1	General	5-1
5.3	Introduction to Performance and Flight Planning.....	5-1
5.5	Flight Planning Example	5-3
5.7	Performance Graphs	5-9
	List of Figures	5-9

SECTION 5

PERFORMANCE

5.1 GENERAL

All of the required (FAA regulations) and complementary performance information applicable to the Archer II is provided by this section.

Performance information associated with those optional systems and equipment which require handbook supplements is provided by Section 9 (Supplements).

5.3 INTRODUCTION TO PERFORMANCE AND FLIGHT PLANNING

The performance information presented in this section is based on measured Flight Test Data corrected to I.C.A.O. standard day conditions and analytically expanded for the various parameters of weight, altitude, temperature, etc.

The performance charts are unfactored and do not make any allowance for varying degrees of pilot proficiency or mechanical deterioration of the aircraft. This performance, however, can be duplicated by following the stated procedures in a properly maintained airplane.

Effects of conditions not considered on the charts must be evaluated by the pilot, such as the effect of soft or grass runway surface on takeoff and landing performance, or the effect of winds aloft on cruise and range performance. Endurance can be grossly affected by improper leaning procedures, and inflight fuel flow and quantity checks are recommended.

REMEMBER! To get chart performance, follow the chart procedures.

The information provided by paragraph 5.5 (Flight Planning Example) outlines a detailed flight plan using the performance charts in this section. Each chart includes its own example to show how it is used.

WARNING

Performance information derived by extrapolation beyond the limits shown on the charts should not be used for flight planning purposes.

5.5 FLIGHT PLANNING EXAMPLE

(a) Aircraft Loading

The first step in planning the flight is to calculate the airplane weight and center of gravity by utilizing the information provided by Section 6 (Weight and Balance) of this handbook.

The basic empty weight for the airplane as licensed at the factory has been entered in Figure 6-5. If any alterations to the airplane have been made effecting weight and balance, reference to the aircraft logbook and Weight and Balance Record (Figure 6-7) should be made to determine the current basic empty weight of the airplane.

Make use of the Weight and Balance Loading Form (Figure 6-11) and the C.G. Range and Weight graph (Figure 6-15) to determine the total weight of the airplane and the center of gravity position.

After proper utilization of the information provided, the following weights have been determined for consideration in the flight planning example.

The landing weight cannot be determined until the weight of the fuel to be used has been established [refer to item (g)(1)].

(1) Empty Weight	1400 lbs.
(2) Occupants (2 x 170 lbs.)	340 lbs.
(3) Baggage and Cargo	360 lbs.
(4) Fuel (6 lb./gal. x 50)	300 lbs.
(5) Takeoff Weight	2400 lbs.
(6) Landing Weight (a)(5) minus (g)(1), (2400 lbs. minus 129 lbs.)	2271 lbs.

The takeoff weight is below the maximum of 2550 lbs. and the weight and balance calculations have determined that the C.G. position is within the approved limits.

(b) Takeoff and Landing

After determining the aircraft loading, all aspects of takeoff and landing must be considered.

Conditions of the departure and destination airport must be acquired, evaluated and maintained throughout the flight.

Apply the departure airport conditions and takeoff weight to the appropriate Takeoff Performance graph (Figure 5-7 or 5-9) to determine the length of runway necessary for the takeoff and/or the barrier distance.

The landing distance calculations are performed in the same manner using the existing conditions at the destination airport and, when established, the landing weight.

The conditions and calculations for the example flight are listed below. The takeoff and landing distances required for the example flight have fallen well below the available runway lengths.

	Departure Airport	Destination Airport
(1) Pressure Altitude	2000 ft.	2300 ft.
(2) Temperature	21°C	21°C
(3) Wind Component (Headwind)	10 KTS	5 KTS
(4) Runway Length Available	7000 ft.	4500 ft.
(5) Runway Required	950 ft.*	825 ft.**

NOTE

The remainder of the performance charts used in this flight plan example assume a no wind condition. The effect of winds aloft must be considered by the pilot when computing climb, cruise and descent performance.

*reference Figure 5-13
**reference Figure 5-37

(c) Climb

The next step in the flight plan is to determine the necessary climb segment components.

The desired cruise pressure altitude and corresponding cruise outside air temperature values are the first variables to be considered in determining the climb components from the Time, Distance and Fuel to Climb graph (Figure 5-17). After the time, distance and fuel for the cruise pressure altitude and outside air temperature values have been established, apply the existing conditions at the departure field to the graph (Figure 5-17). Now, subtract the values obtained from the graph for the field of departure conditions from those for the cruise pressure altitude.

The remaining values are the true fuel, distance and time components for the climb segment of the flight plan corrected for field pressure altitude and temperature.

The following values were determined from the above instructions in the flight planning example.

(1) Cruise Pressure Altitude	6000 ft.
(2) Cruise OAT	13°C
(3) Time to Climb (11.5 min. minus 3 min.)	8.5 min.*
(4) Distance to Climb (16 minus 4.5 naut. miles)	11.5 naut. miles*
(5) Fuel to Climb (2 gal. minus 1 gal.)	1 gal.*

(d) Descent

The descent data will be determined prior to the cruise data to provide the descent distance for establishing the total cruise distance.

Utilizing the cruise pressure altitude and OAT, determine the basic time, distance and fuel for descent (Figure 5-31). These figures must be adjusted for the field pressure altitude and temperature at the destination airport. To find the necessary adjustment values, use the existing pressure altitude and temperature conditions at the destination airport as variables to find the time, distance and fuel

*reference Figure 5-17

values from the graph (Figure 5-31). Now, subtract the values obtained from the field conditions from the values obtained from the cruise conditions to find the true time, distance and fuel values needed for the flight plan.

The values obtained by proper utilization of the graphs for the descent segment of the example are shown below.

(1) Time to Descend
(16 min. minus 7.5 min.) — 8.5 min.*

(2) Distance to Descend
(35 minus 14.5 naut. miles) — 20.5 naut. miles*

(3) Fuel to Descend
(2 gal. minus 1 gal.) — 1 gal.*

(e) Cruise

Using the total distance to be traveled during the flight, subtract the previously calculated distance to climb and distance to descend to establish the total cruise distance. Refer to the appropriate Avco Lycoming Operator's Manual when selecting the cruise power setting. The established pressure altitude and temperature values and the selected cruise power should now be utilized to determine the true airspeed from the appropriate Speed Power graph (Figure 5-21 or 5-23).

Calculate the cruise fuel flow for the cruise power setting from the information provided by the Avco Lycoming Operator's Manual.

The cruise time is found by dividing the cruise distance by the cruise speed and the cruise fuel is found by multiplying the cruise fuel flow by the cruise time.

The cruise calculations established for the cruise segment of the flight planning example are as follows:

(1) Total Distance — 314 naut. miles

(2) Cruise Distance
(e)(1) minus (c)(4) minus (d)(2),
(314 minus 11.5 minus 20.5) — 282 naut. miles

*reference Figure 5-31

(3) Cruise Power — 65% rated power

(4) Cruise Speed — 110 KTS TAS*

(5) Cruise Fuel Consumption — 7.6 GPH

(6) Cruise Time
(e)(2) divided by (e)(4), (282 naut. miles divided by 110 KTS) — 2.56 hrs.

(7) Cruise Fuel
(e)(5) multiplied by (e)(6), (7.6 GPH multiplied by 2.56 hrs.) — 19.5 gal.

(f) Total Flight Time

The total flight time is determined by adding the time to climb, the time to descend and the cruise time. Remember! The time values taken from the climb and descent graphs are in minutes and must be converted to hours before adding them to the cruise time.

The following flight time is required for the flight planning example.

(1) Total Flight Time
(c)(3) plus (d)(1) plus (e)(6),
(.14 hrs. plus .14 hrs. plus 2.56 hrs.) — 2.84 hrs.

(g) Total Fuel Required

Determine the total fuel required by adding the fuel to climb, the fuel to descend and the cruise fuel. When the total fuel (in gallons) is determined, multiply this value by 6 lb./gal. to determine the total fuel weight used for the flight.

The total fuel calculations for the example flight plan are shown below.

(1) Total Fuel Required
(c)(5) plus (d)(3) plus (e)(7),
(1 gal. plus 1 gal. plus 19.5 gal.) — 21.5 gal.
(21.5 gal. multiplied by 6 lb./gal.) — 129 lbs.

*reference Figure 5-23

THIS PAGE INTENTIONALLY LEFT BLANK

5.7 PERFORMANCE GRAPHS

LIST OF FIGURES

Figure No.		Page No.
5-1	Temperature Conversion	5-11
5-3	Airspeed System Calibration	5-12
5-5	Stall Speeds	5-13
5-7	Flaps Up Takeoff Performance	5-14
5-9	25° Flaps Takeoff Performance	5-15
5-11	Flaps Up Takeoff Ground Roll	5-16
5-13	25° Flaps Takeoff Ground Roll	5-17
5-15	Climb Performance	5-18
5-17	Time, Distance and Fuel to Climb	5-19
5-19	Engine Performance	5-20
5-21	Speed Power - Performance Cruise	5-21
5-23	Speed Power - Economy Cruise	5-22
5-25	Best Power Mixture Range	5-23
5-27	Best Economy Mixture Range	5-24
5-29	Endurance	5-25
5-31	Time, Distance and Fuel to Descend	5-26
5-33	Glide Range	5-27
5-35	Landing Performance	5-28
5-37	Landing Ground Roll	5-29

THIS PAGE INTENTIONALLY LEFT BLANK

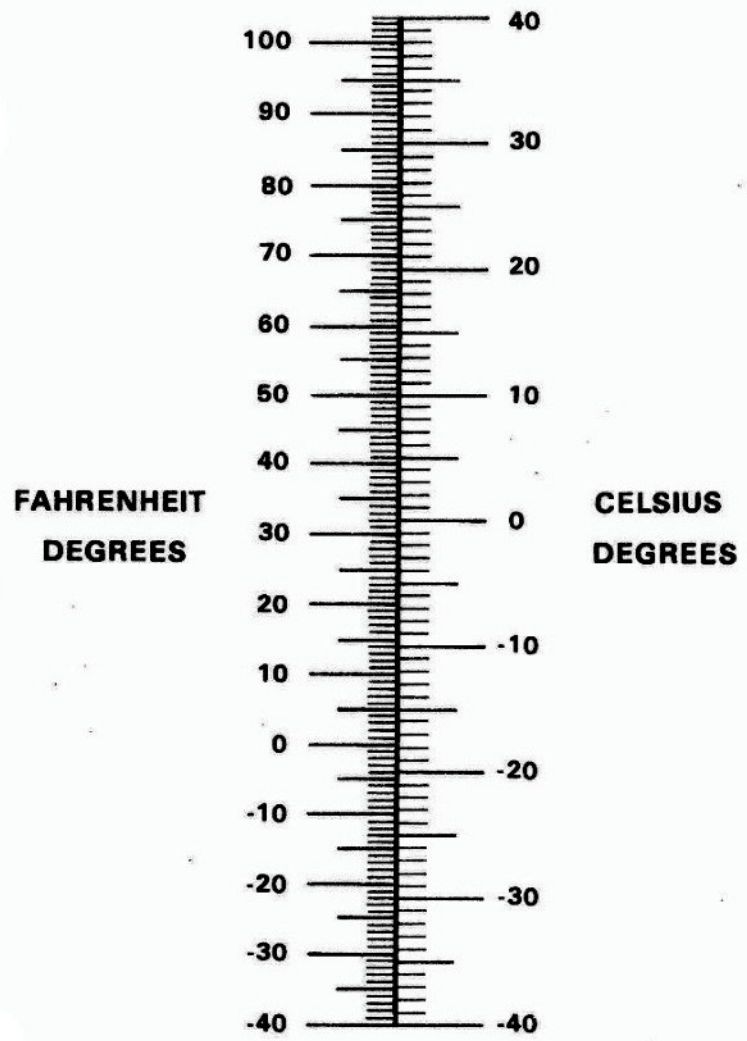

TEMPERATURE CONVERSION
Figure 5-1

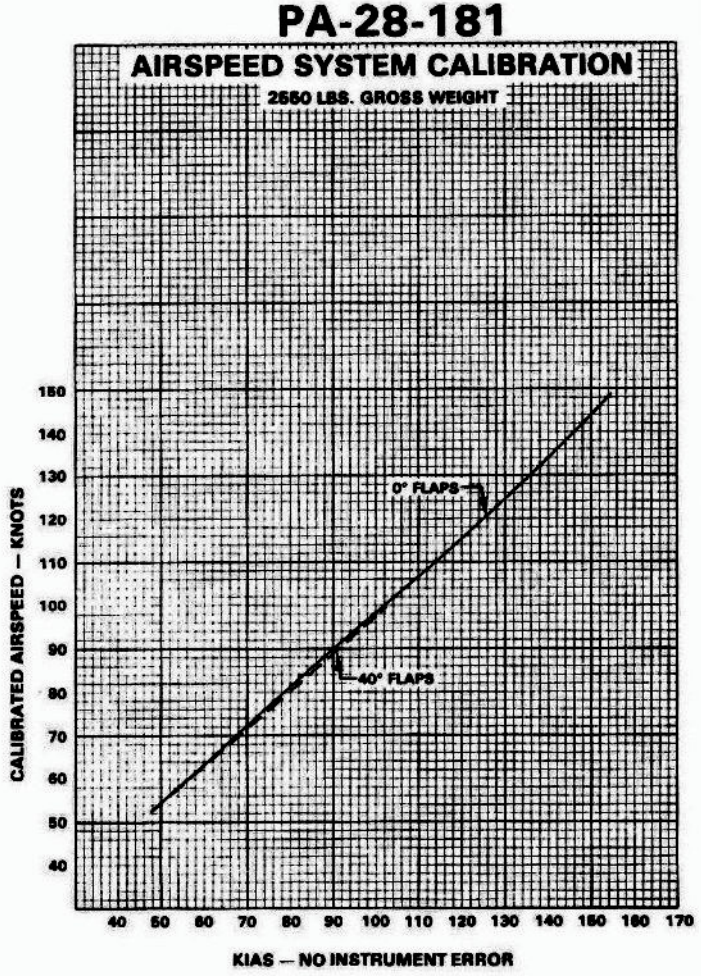

AIRSPEED SYSTEM CALIBRATION
Figure 5-3

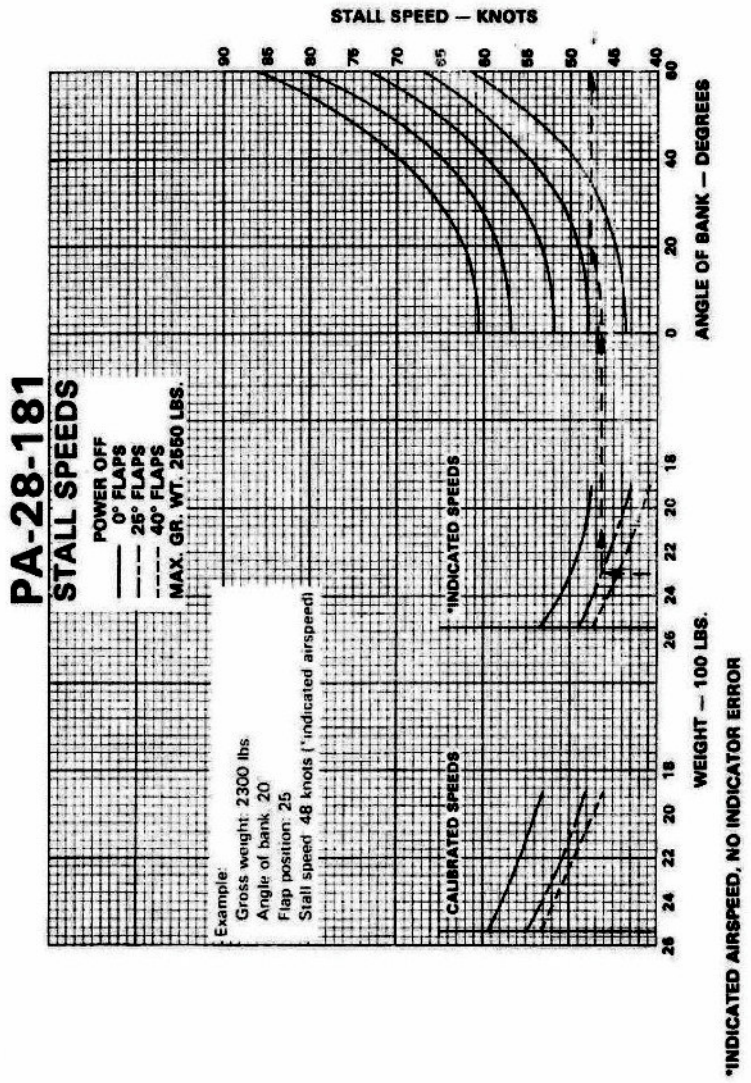

STALL SPEEDS
Figure 5-5

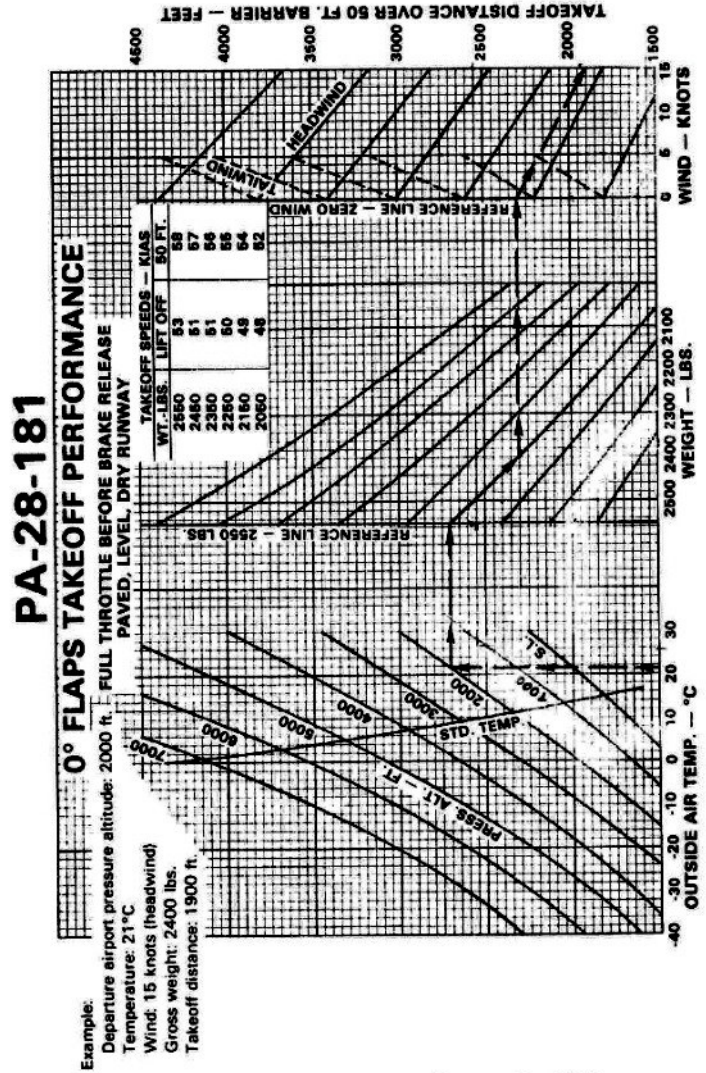

FLAPS UP TAKEOFF PERFORMANCE
Figure 5-7

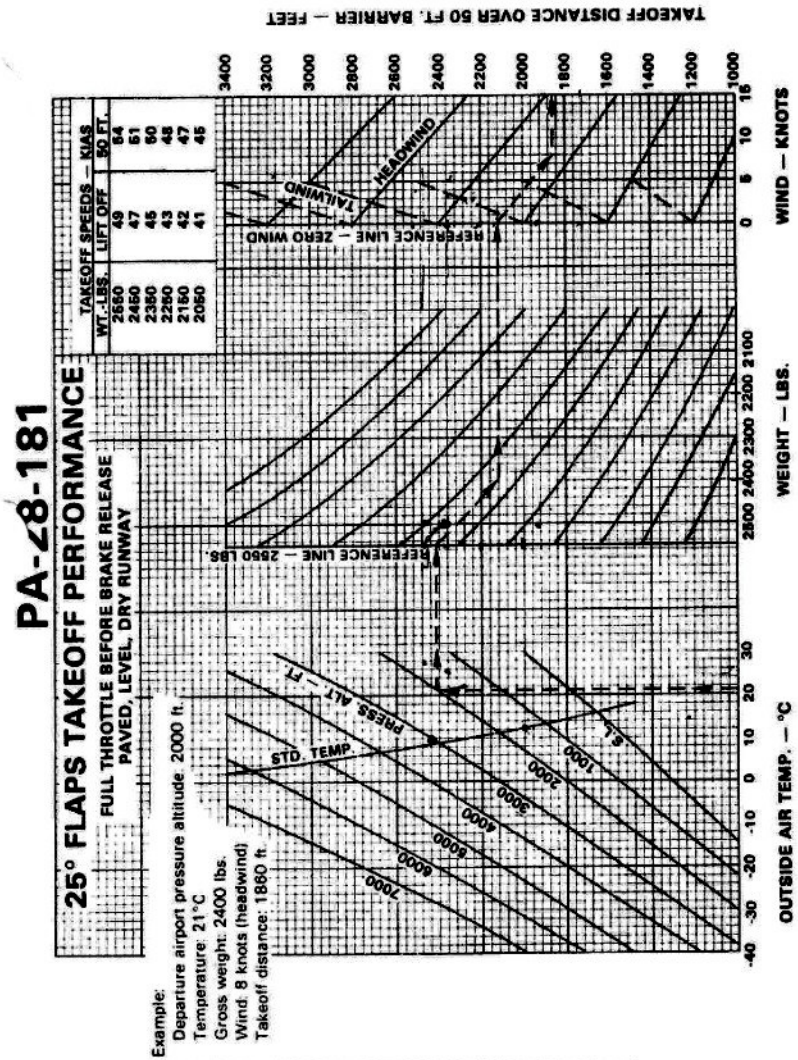

25° FLAPS TAKEOFF PERFORMANCE
Figure 5-9

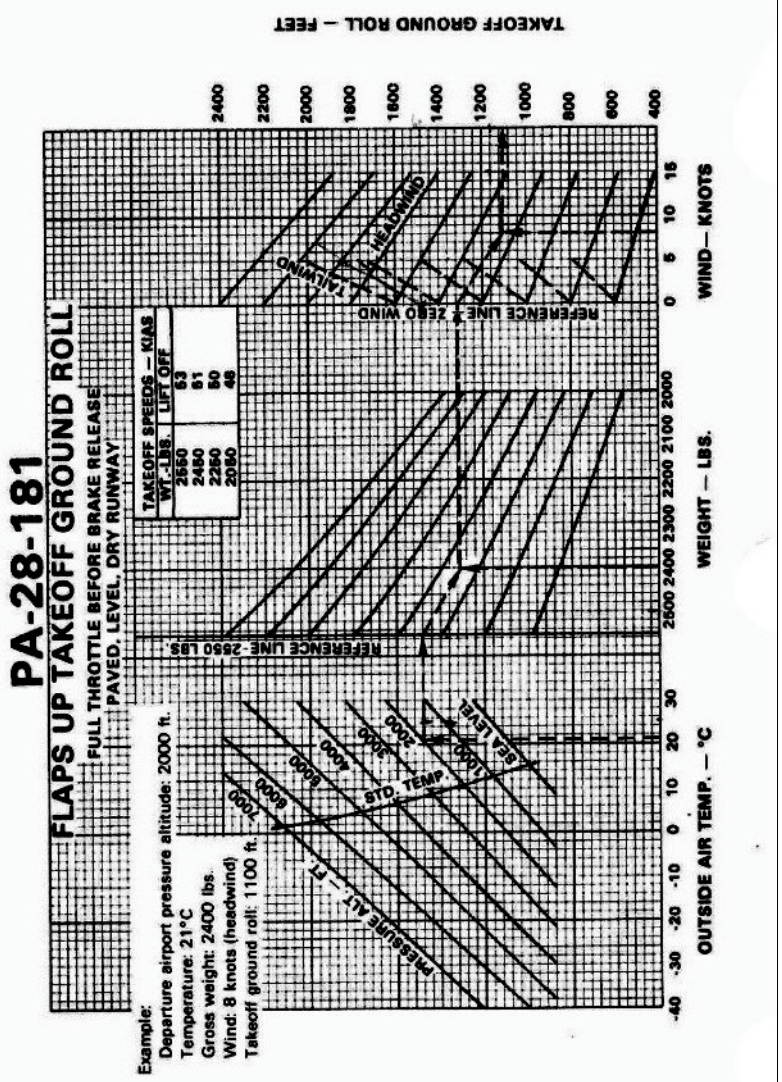

FLAPS UP TAKEOFF GROUND ROLL
Figure 5-11

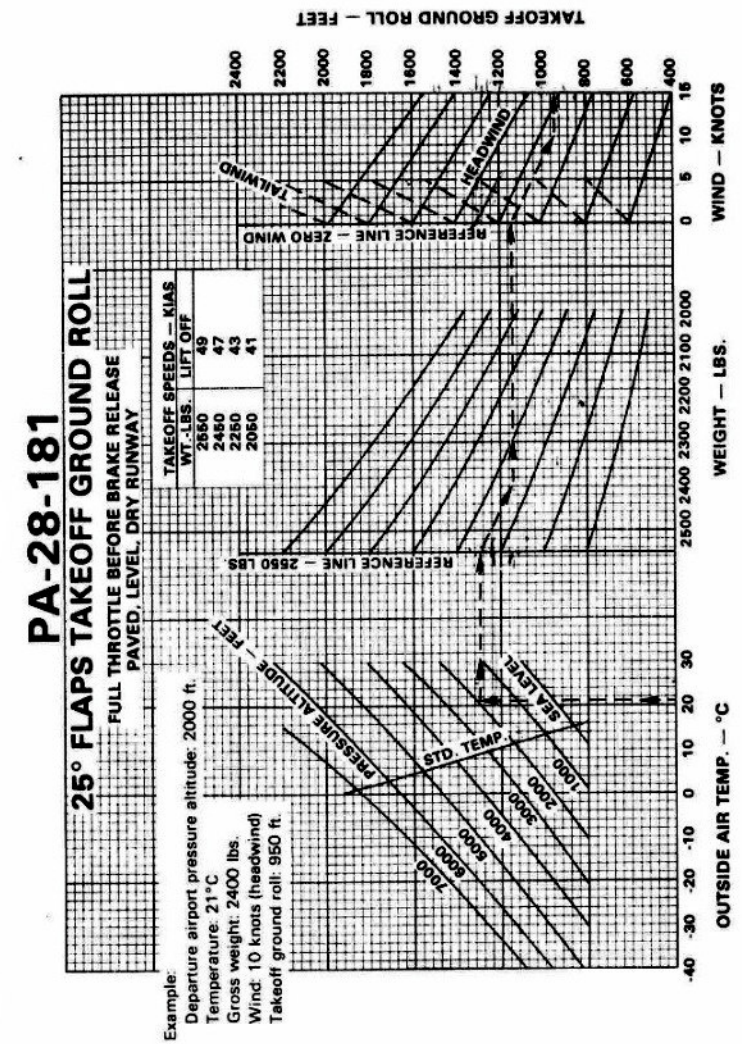

25° FLAPS TAKEOFF GROUND ROLL
Figure 5-13

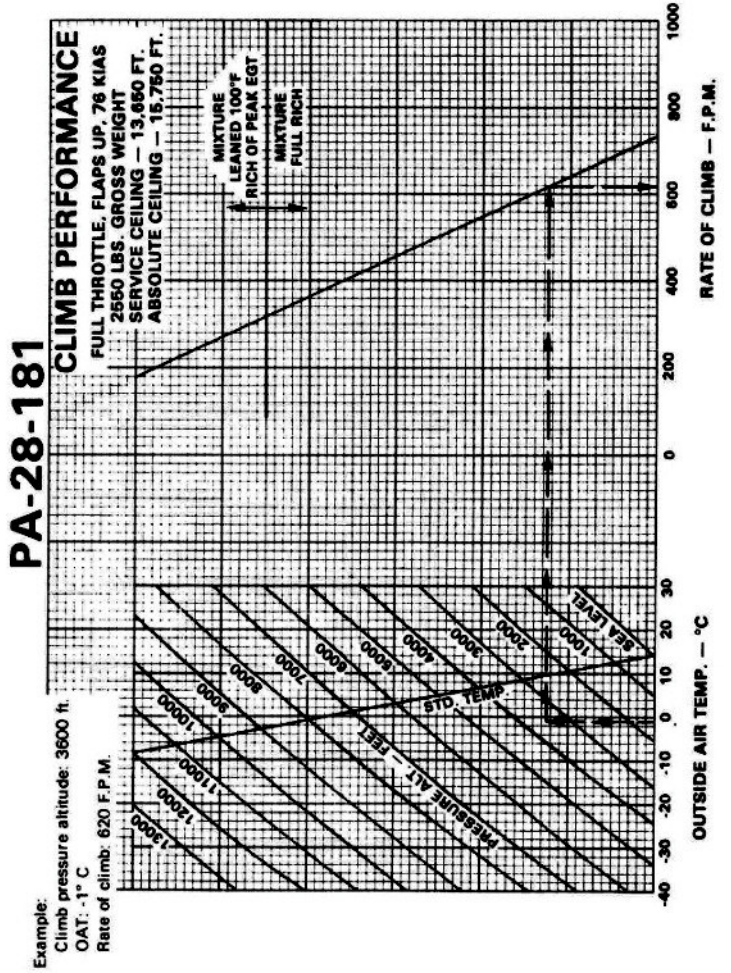

CLIMB PERFORMANCE
Figure 5-15

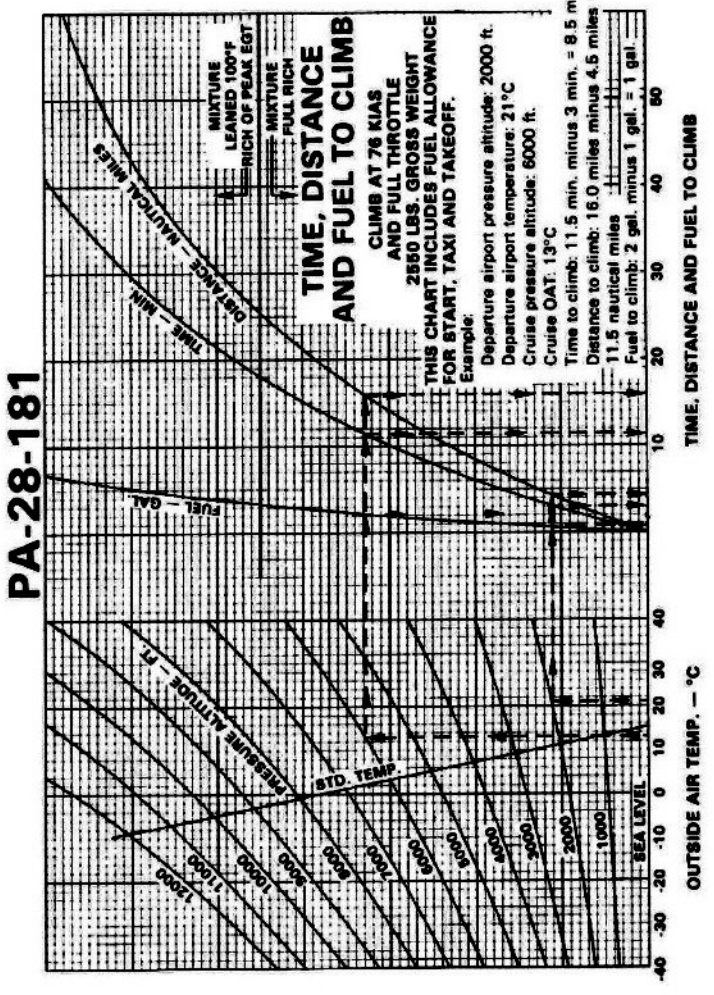

TIME, DISTANCE AND FUEL TO CLIMB
Figure 5-17

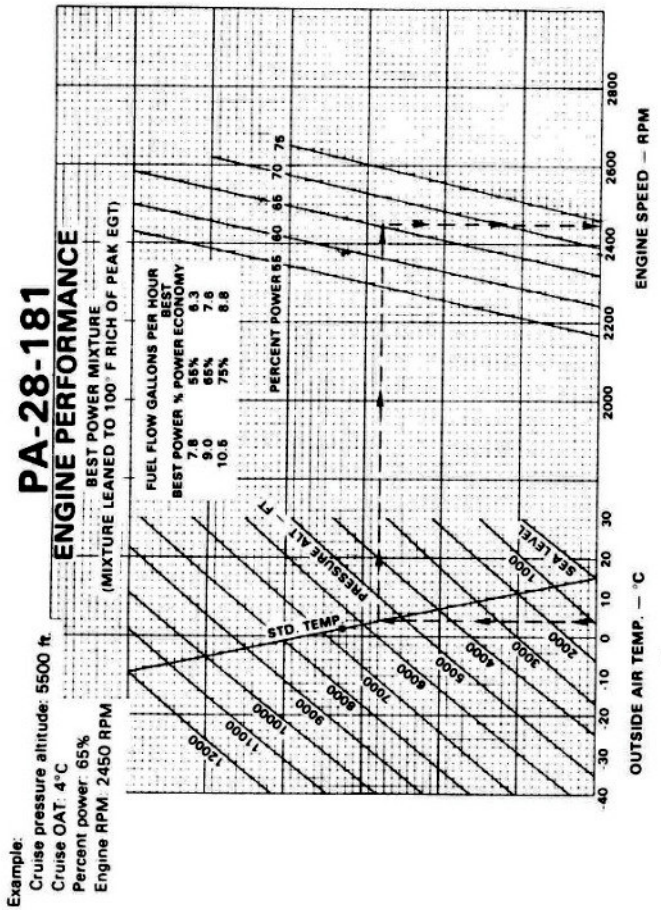

ENGINE PERFORMANCE
Figure 5-19

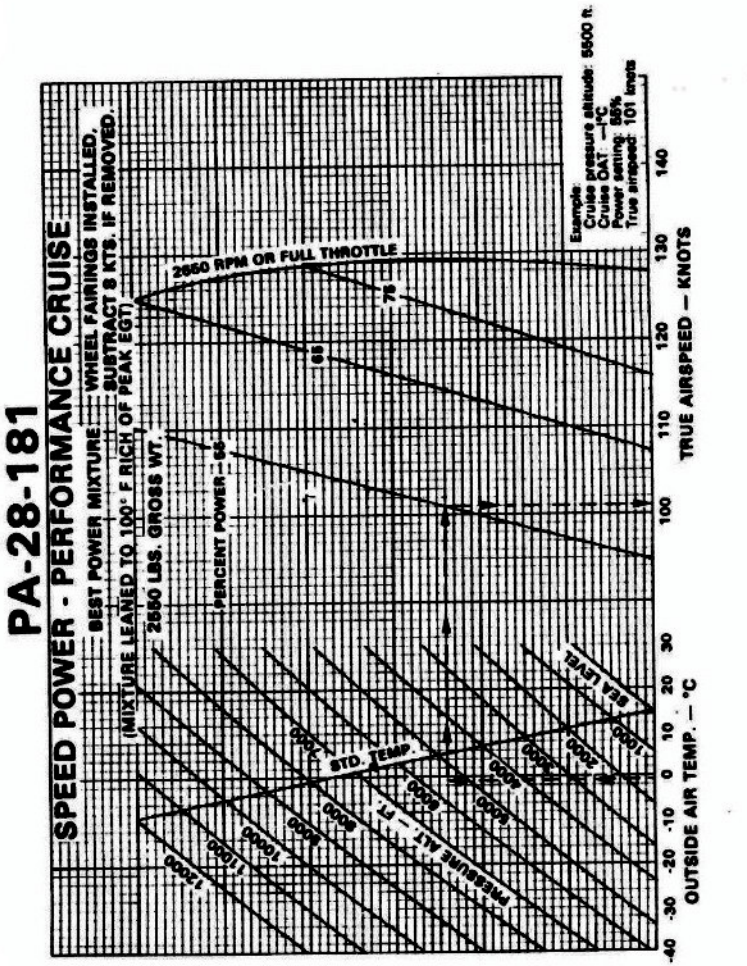

SPEED POWER - PERFORMANCE CRUISE
Figure 5-21

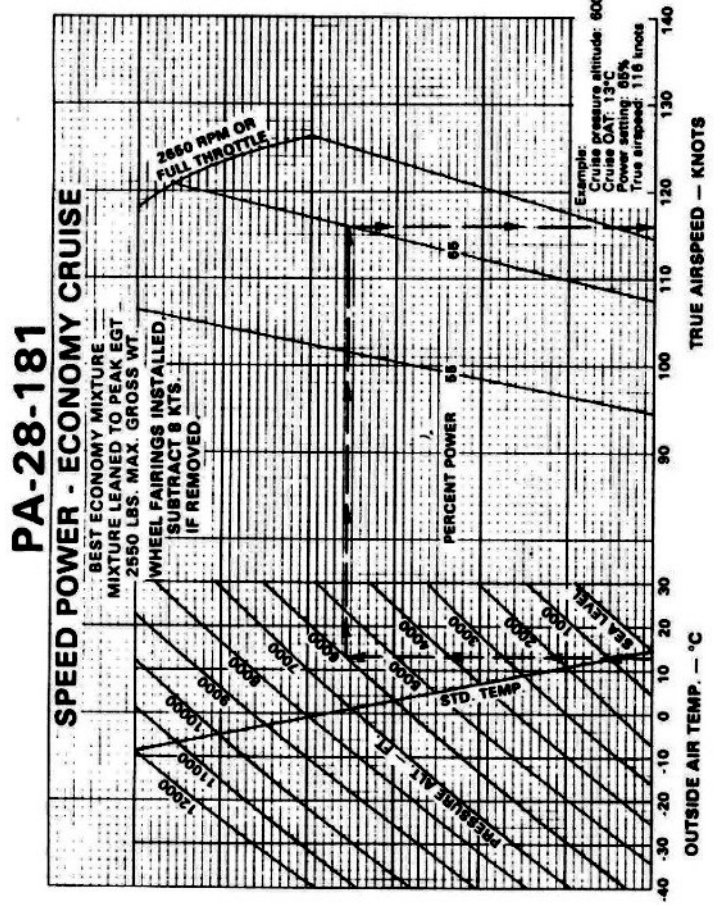

SPEED POWER - ECONOMY CRUISE
Figure 5-23

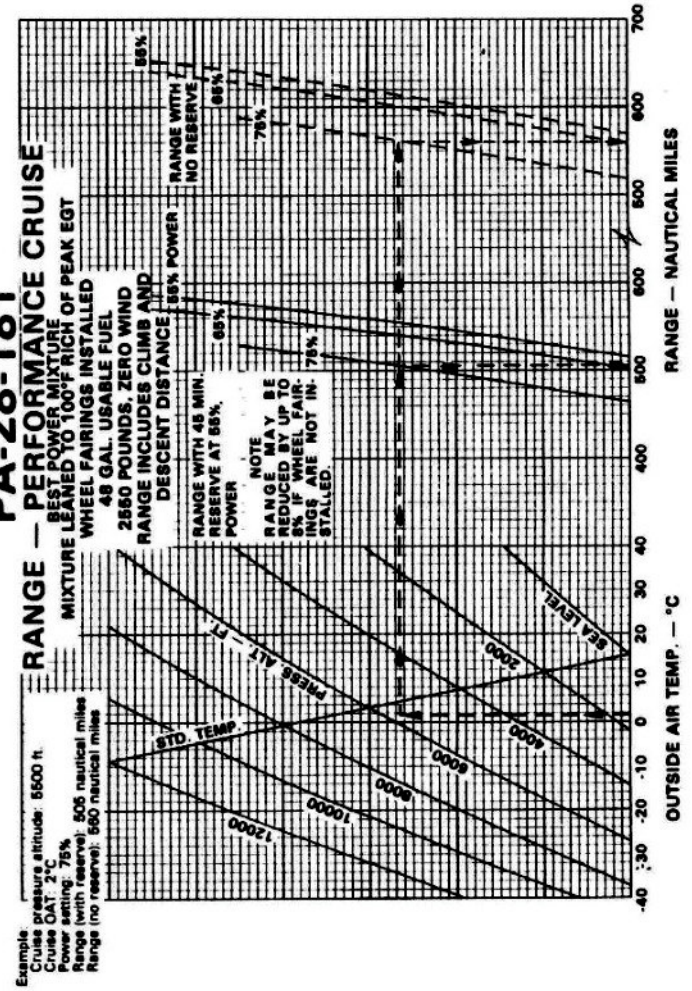

BEST POWER MIXTURE RANGE
Figure 5-25

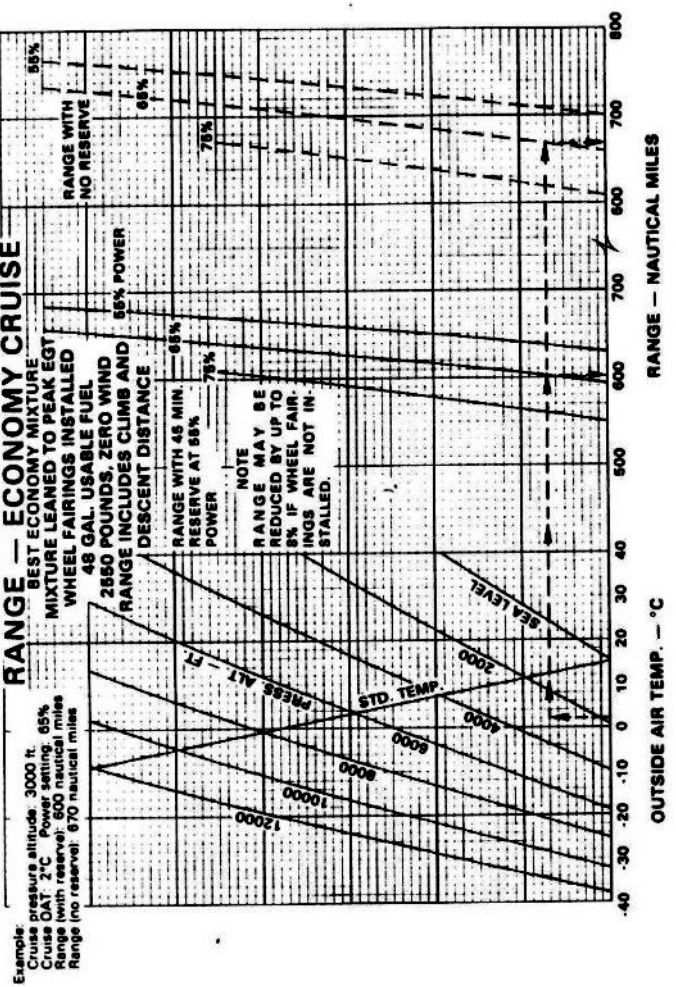

BEST ECONOMY MIXTURE RANGE
Figure 5-27

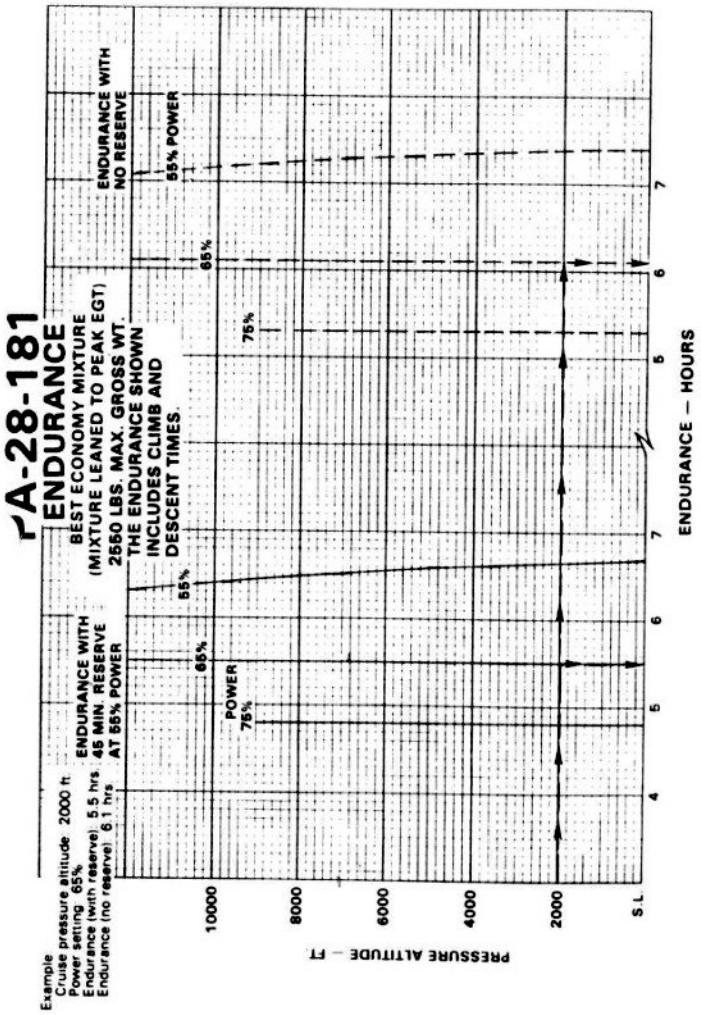

ENDURANCE
Figure 5-29

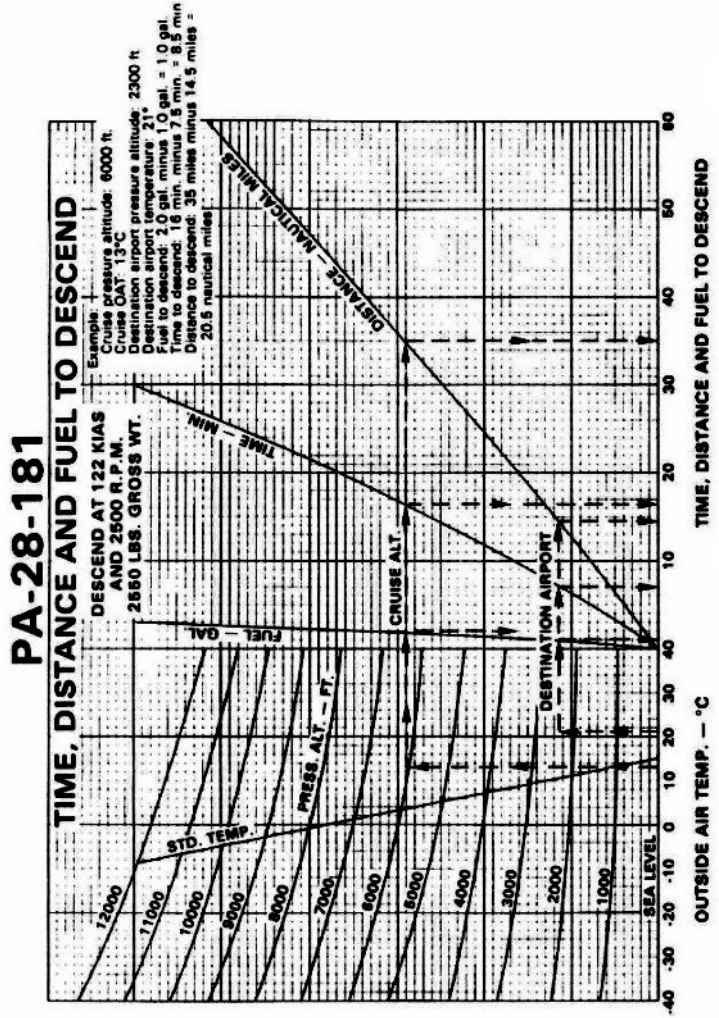

TIME, DISTANCE AND FUEL TO DESCEND
Figure 5-31

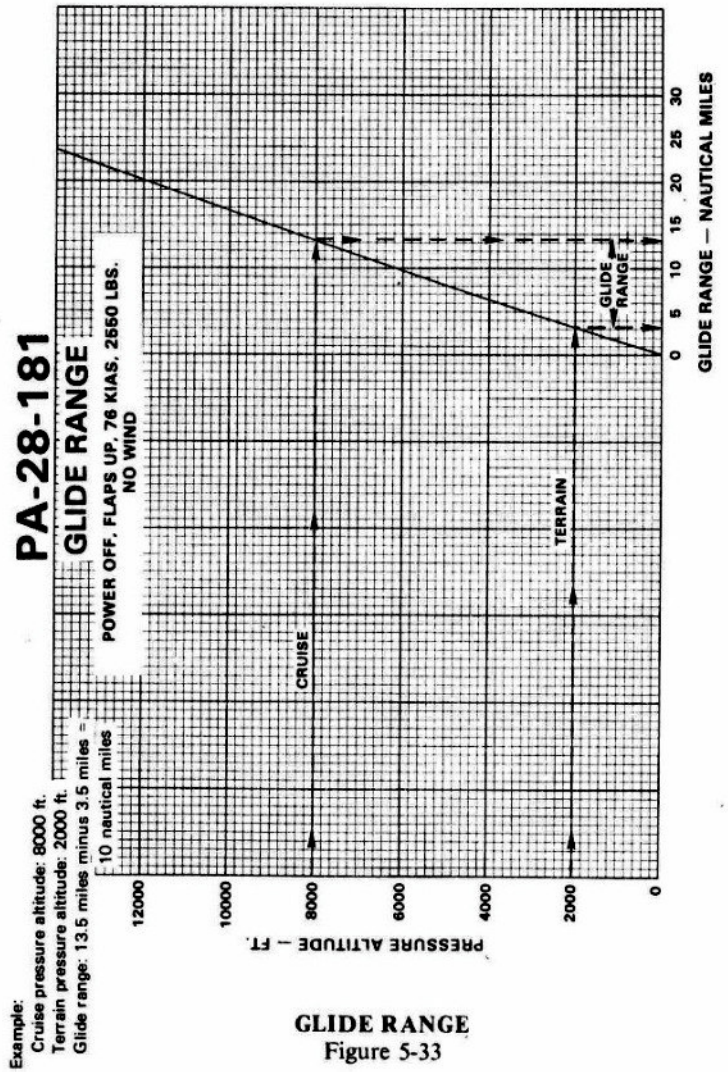

GLIDE RANGE
Figure 5-33

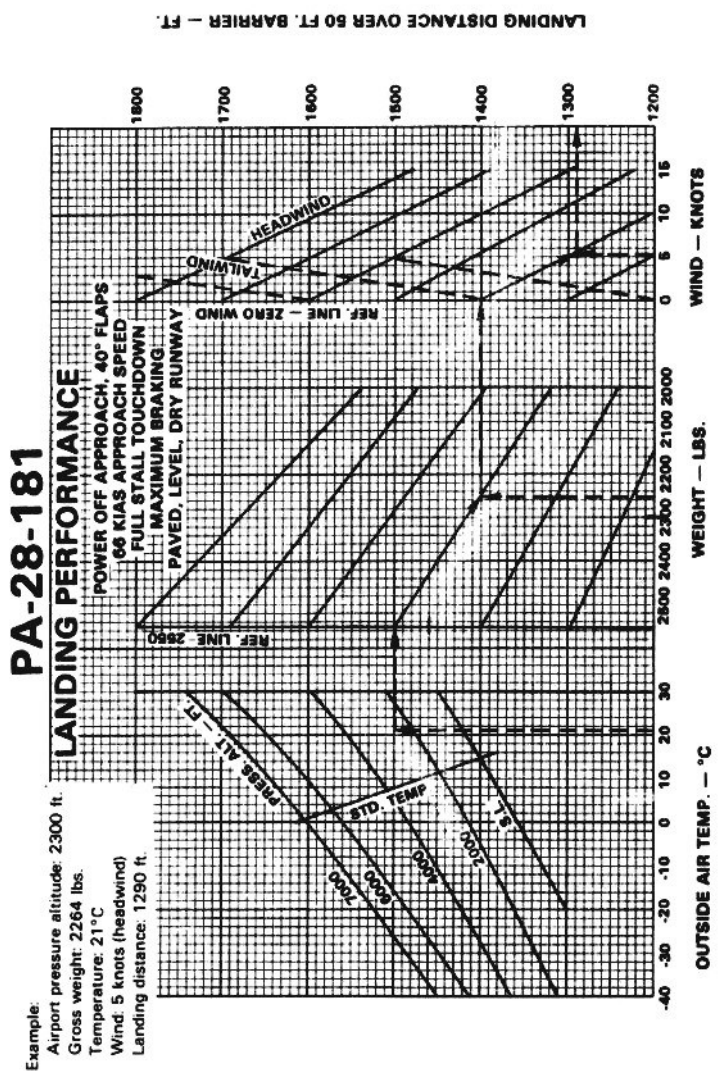

LANDING PERFORMANCE
Figure 5-35

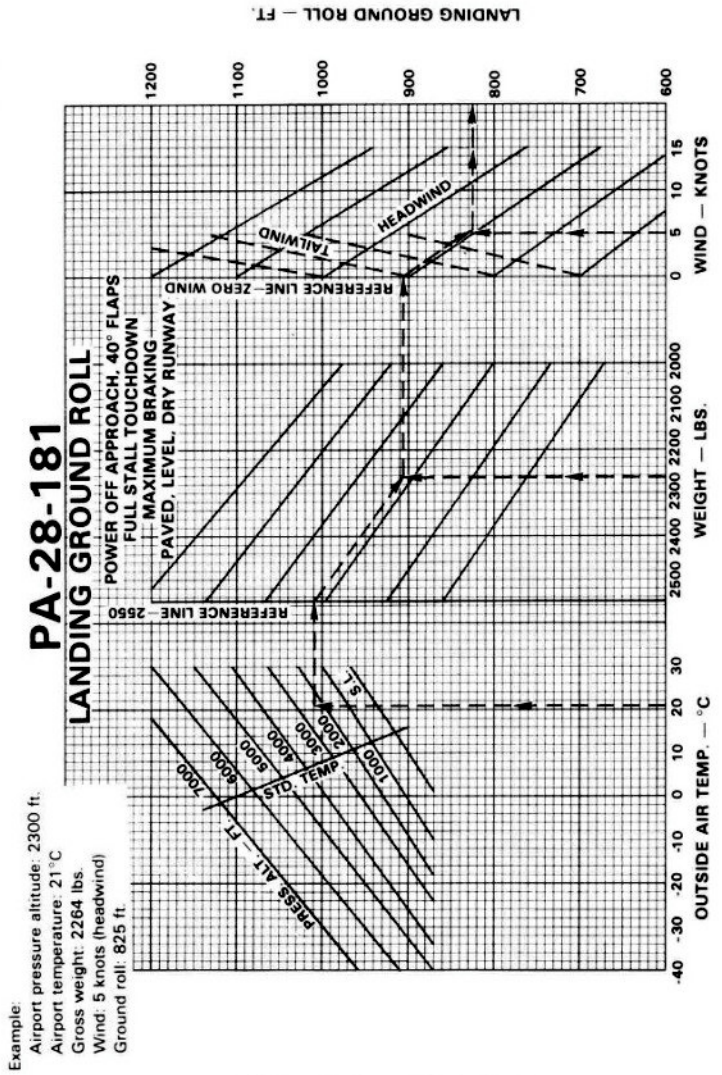

LANDING GROUND ROLL
Figure 5-37

TABLE OF CONTENTS

SECTION 6

WEIGHT AND BALANCE

Paragraph No.			Page No.
6.1		General	6-1
6.3		Airplane Weighing Procedure	6-2
6.5		Weight and Balance Data and Record	6-5
6.7		Weight and Balance Determination for Flight	6-9
6.9		Instructions for Using the Weight and Balance Plotter	6-12a
6.11		*Equipment List	6-13
	(a)	Propeller and Propeller Accessories	6-14
	(b)	Engine and Engine Accessories	6-15
	(c)	Landing Gear and Brakes	6-17
	(d)	Electrical Equipment	6-19
	(e)	Instruments	6-20
	(f)	Miscellaneous	6-21
	(g)	Engine and Engine Accessories (Optional Equipment)	6-23
	(h)	Propeller and Propeller Accessories (Optional Equipment)	6-23
	(i)	Landing Gear and Brakes (Optional Equipment)	6-24
	(j)	Electrical Equipment (Optional Equipment)	6-25
	(k)	Instruments (Optional Equipment)	6-28
	(l)	Autopilots (Optional Equipment)	6-29a
	(m)	Radio Equipment (Optional Equipment)	6-29b
	(n)	Miscellaneous (Optional Equipment)	6-41
		**Equipment List (Form 240-0007)	ENCLOSED WITH THIS HANDBOOK

*For 1982 and preceding models only.
**For 1983 and subsequent models only.

SECTION 6

WEIGHT AND BALANCE

6.1 GENERAL

In order to achieve the performance and flying characteristics which are designed into the airplane, it must be flown with the weight and center of gravity (C.G.) position within the approved operating range (envelope). Although the airplane offers flexibility of loading, it cannot be flown with the maximum number of adult passengers, full fuel tanks and maximum baggage. With the flexibility comes responsibility. The pilot must ensure that the airplane is loaded within the loading envelope before he makes a takeoff.

Misloading carries consequences for any aircraft. An overloaded airplane will not take off, climb or cruise as well as a properly loaded one. The heavier the airplane is loaded, the less climb performance it will have.

Center of gravity is a determining factor in flight characteristics. If the C.G. is too far forward in any airplane, it may be difficult to rotate for takeoff or landing. If the C.G. is too far aft, the airplane may rotate prematurely on takeoff or tend to pitch up during climb. Longitudinal stability will be reduced. This can lead to inadvertent stalls and even spins; and spin recovery becomes more difficult as the center of gravity moves aft of the approved limit.

A properly loaded airplane, however, will perform as intended. Before the airplane is licensed, a basic empty weight and C.G. location is computed (basic empty weight consists of the standard empty weight of the airplane plus the optional equipment). Using the basic empty weight and C.G. location, the pilot can easily determine the weight and C.G. position for the loaded airplane by computing the total weight and moment and then determining whether they are within the approved envelope.

The basic empty weight and C.G. location are recorded in the Weight and Balance Data Form (Figure 6-5) and the Weight and Balance Record (Figure 6-7). The current values should always be used. Whenever new equipment is added or any modification work is done, the mechanic responsible for the work is required to compute a new basic empty weight and C.G. position and to write these in the Aircraft Log Book and the Weight and Balance Record. The owner should make sure that it is done.

A weight and balance calculation is necessary in determining how much fuel or baggage can be boarded so as to keep within allowable limits. Check calculations prior to adding fuel to insure against improper loading.

The following pages are forms used in weighing an airplane in production and in computing basic empty weight, C.G. position, and useful load. Note that the useful load includes usable fuel, baggage, cargo and passengers. Following this is the method for computing takeoff weight and C.G.

6.3 AIRPLANE WEIGHING PROCEDURE

At the time of licensing, Piper Aircraft Corporation provides each airplane with the basic empty weight and center of gravity location. This data is supplied by Figure 6-5.

The removal or addition of equipment or airplane modifications can affect the basic empty weight and center of gravity. The following is a weighing procedure to determine this basic empty weight and center of gravity location:

(a) Preparation

(1) Be certain that all items checked in the airplane equipment list are installed in the proper location in the airplane.

(2) Remove excessive dirt, grease, moisture, foreign items such as rags and tools from the airplane before weighing.

(3) Defuel airplane. Then open all fuel drains until all remaining fuel is drained. Operate engine on each tank until all undrainable fuel is used and engine stops. Then add the unusable fuel (2.0 gallons total, 1.0 gallons each wing).

CAUTION

Whenever the fuel system is completely drained and fuel is replenished it will be necessary to run the engine for a minimum of 3 minutes at 1000 RPM on each tank to ensure no air exists in the fuel supply lines.

(4) Fill with oil to full capacity.

(5) Place pilot and copilot seats in fourth (4th) notch, aft of forward position. Put flaps in the fully retracted position and all control surfaces in the neutral position. Tow bar should be in the proper location and all entrance and baggage doors closed.

(6) Weigh the airplane inside a closed building to prevent errors in scale readings due to wind.

(b) Leveling

(1) With airplane on scales, block main gear oleo pistons in the fully extended position.

(2) Level airplane (refer to Figure 6-3) deflating nose wheel tire, to center bubble on level.

(c) Weighing - Airplane Basic Empty Weight

(1) With the airplane level and brakes released, record the weight shown on each scale. Deduct the tare, if any, from each reading.

Scale Position and Symbol	Scale Reading	Tare	Net Weight
Nose Wheel (N)			
Right Main Wheel (R)			
Left Main Wheel (L)			
Basic Empty Weight, as Weighed (T)	—	—	

WEIGHING FORM
Figure 6-1

(d) Basic Empty Weight Center of Gravity

(1) The following geometry applies to the PA-28-181 airplane when it is level. Refer to Leveling paragraph 6.3 (b).

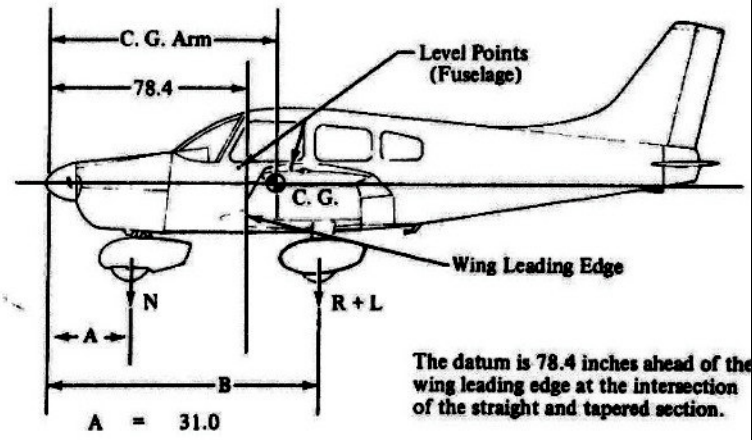

LEVELING DIAGRAM
Figure 6-3

(2) The basic empty weight center of gravity (as weighed including optional equipment, full oil and unusable fuel) can be determined by the following formula:

$$\text{C.G. Arm} = \frac{N(A) + (R + L)(B)}{T} \quad \text{inches}$$

Where: $T = N + R + L$

6.5 WEIGHT AND BALANCE DATA AND RECORD

The Basic Empty Weight, Center of Gravity Location and Useful Load listed in Figure 6-5 are for the airplane as licensed at the factory. These figures apply only to the specific airplane serial number and registration number shown.

The basic empty weight of the airplane as licensed at the factory has been entered in the Weight and Balance Record (Figure 6-7). This form is provided to present the current status of the airplane basic empty weight and a complete history of previous modifications. Any change to the permanently installed equipment or modification which affects weight or moment must be entered in the Weight and Balance Record.

MODEL PA-28-181 ARCHER II

Airplane Serial Number 2890008

Registration Number HB - PKG

FOCA FL / Ms

Date 9/30/86

AIRPLANE BASIC EMPTY WEIGHT

Item	Weight (Lbs)	x C.G. Arm (Inches Aft of Datum)	= Moment (In-Lbs)
Standard Empty Weight* Actual ~~Computed~~	1425.3	85.0	121162
Optional Equipment	174.9	105.6	18475
Basic Empty Weight	1600.2	87.3	139637

*The standard empty weight includes full oil capacity and 2.0 gallons of unusable fuel.

AIRPLANE USEFUL LOAD

(Ramp Weight) - (Basic Empty Weight) = Useful Load

Normal Category (2558 lbs.) - (1600.2 lbs.) = 957.8 lbs.

Utility Category (2138 lbs.) - (1600.2 lbs.) = 537.8 lbs.

THIS BASIC EMPTY WEIGHT, C.G. AND USEFUL LOAD ARE FOR THE AIRPLANE AS LICENSED AT THE FACTORY. REFER TO APPROPRIATE AIRCRAFT RECORD WHEN ALTERATIONS HAVE BEEN MADE.

WEIGHT AND BALANCE DATA FORM
Figure 6-5

FOCA FL / Ms

PA 81 Serial Number 2890008 Registration Number HB-PKG Page Number

Date	Item No.	Description of Article or Modification	Added (+) Removed (-)	Weight Change Wt. (Lb.)	Weight Change Arm (In.)	Weight Change Moment /100	Running Basic Empty Weight Wt. (Lb.)	Running Basic Empty Weight Moment /100
9/30/86		As Licensed					1600.2	139637
Dec 3rd 1986	283	N°2 K1208	+	1.0	59.6	60		
	288	N°2 KX 155	+	5.0	58.1	291		
	294	KA 13+	+	0.8	65.3	52		
	327	N°2 VHF WM antenna	+	1.5	170.7	256	1608.5	140296
19.5.87	406	Lütolf Hour Meter	+	0.8	61.5	49	1609.3	140345
13.2.88	410	Silencer MECANAR	+	7.2	33.86	2.44	1616.5	1405.89
2.9.88	289	DME King KN 64	x	3.3	58.3	192	1619.8	140781
2.95.96	314	Intercom PS Eng. PM-1000	+	1.3	72.7	94.50	1621.1	140875.5
17.3.99	343	GPS GARMIN 155XL	+	3.2	60.0	192	1624.3	141049.5

Armin Leicht
BAZL MAG No 31

PORDOSE
AVIONIC FEDERAL
BAZL 140

WEIGHT AND BALANCE RECORD
Figure 6-7

PIPER AIRCRAFT CORPORATION
PA-28-181, ARCHER II
SECTION 6
WEIGHT AND BALANCE

6.7 WEIGHT AND BALANCE DETERMINATION FOR FLIGHT

(a) Add the weight of all items to be loaded to the basic empty weight.
(b) Use the Loading Graph (Figure 6-13) to determine the moment of all items to be carried in the airplane.
(c) Add the moment of all items to be loaded to the basic empty weight moment.
(d) Divide the total moment by the total weight to determine the C.G. location.
(e) By using the figures of item (a) and item (d) (above), locate a point on the C.G. range and weight graph (Figure 6-15). If the point falls within the C.G. envelope, the loading meets the weight and balance requirements.

	Weight (Lbs)	Arm Aft Datum (Inches)	Moment (In-Lbs)
Basic Empty Weight	1590.0	87.5	139125
Pilot and Front Passenger	340.0	80.5	27370
Passengers (Rear Seats)*	340.0	118.1	40154
Fuel (48 Gallon Maximum)	288.0	95.0	27360
Baggage (200 Lbs. Maximum)*		142.8	
Ramp Weight (2558 Lbs. Normal, 2138 Lbs. Utility Maximum)	2558	91.5	234009
Fuel Allowance For Engine Start, Taxi and Run Up	-8	95.0	-760
Takeoff Weight (2550 Lbs. Normal, 2130 Lbs. Utility Maximum)	2550.0	91.5	233249

The center of gravity (C.G.) of this sample loading problem is at 91.5 inches aft of the datum line. Locate this point (91.5) on the C.G. range and weight graph. Since this point falls within the weight - C.G. envelope, this loading meets the weight and balance requirements.

IT IS THE RESPONSIBILITY OF THE PILOT AND AIRCRAFT OWNER TO ENSURE THAT THE AIRPLANE IS LOADED PROPERLY.

*Utility Category Operation - No baggage or rear passengers allowed.

SAMPLE LOADING PROBLEM (NORMAL CATEGORY)
Figure 6-9

	Weight (Lbs)	Arm Aft Datum (Inches)	Moment (In-Lbs)
Basic Empty Weight			
Pilot and Front Passenger		80.5	
Passengers (Rear Seats)*		118.1	
Fuel (48 Gallon Maximum)		95.0	
Baggage (200 Lbs. Maximum)*		142.8	
Ramp Weight (2558 Lbs. Normal, 2138 Lbs. Utility Maximum)			
Fuel Allowance For Engine Start, Taxi and Run Up	-8	95.0	-760
Takeoff Weight (2550 Lbs. Normal, 2130 Lbs. Utility Maximum)			

Totals must be within approved weight and C.G. limits. It is the responsibility of the airplane owner and the pilot to insure that the airplane is loaded properly. The Basic Empty Weight C.G. is noted on the Weight and Balance Data Form (Figure 6-5). If the airplane has been altered, refer to the Weight and Balance Record for this information.

*Utility Category Operation - No baggage or rear passengers allowed.

WEIGHT AND BALANCE LOADING FORM
Figure 6-11

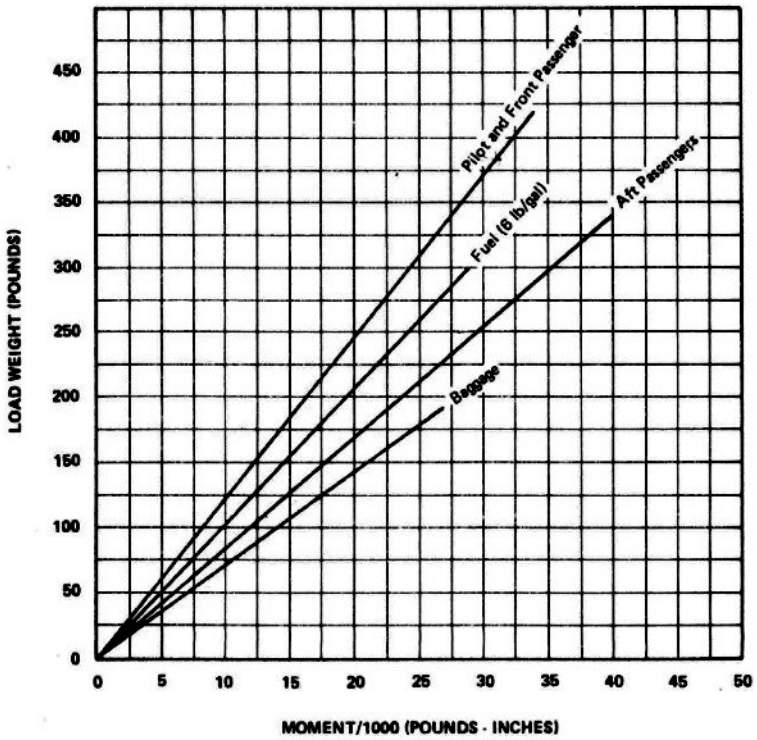

LOADING GRAPH
Figure 6-13

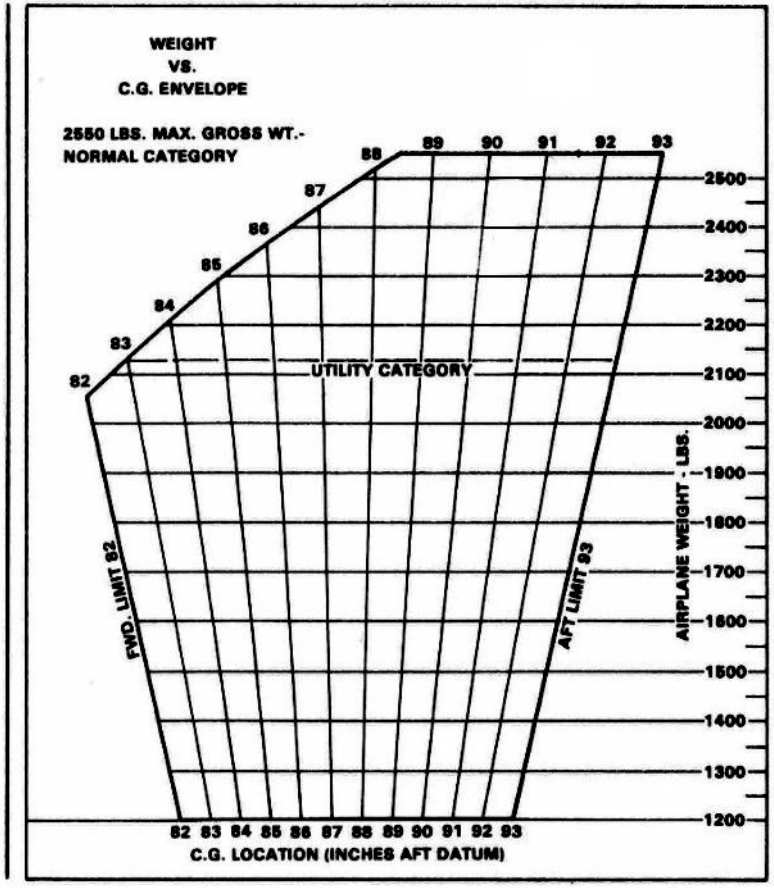

C.G. RANGE AND WEIGHT
Figure 6-15

6.9 INSTRUCTIONS FOR USING THE WEIGHT AND BALANCE PLOTTER

This plotter is provided to enable the pilot quickly and conveniently to:

(a) Determine the total weight and C.G. position.

(b) Decide how to change his load if his first loading is not within the allowable envelope.

Heat can warp or ruin the plotter if it is left in the sunlight. Replacement plotters may be purchased from Piper dealers and distributors.

The "Basic Empty Weight and Center of Gravity" location is taken from the Weight and Balance Form (Figure 6-5), the Weight and Balance Record (Figure 6-7) or the latest FAA major repair or alteration form.

The plotter enables the user to add weights and corresponding moments graphically. The effect of adding or disposing of useful load can easily be seen. The plotter does not cover the situation where cargo is loaded in locations other than on the seats or in the baggage compartments.

Brief instructions are given on the plotter itself. To use it, first plot a point on the grid to locate the basic weight and C.G. location. This can be put on more or less permanently because it will not change until airplane is modified. Next, position the zero weight end of any one of the loading slots over this point. Using a pencil, draw a line along the slot to the weight which will be carried in that location. Then position the zero weight end of the next slot over the end of this line and draw another line representing the weight which will be located in this second position. When all the loads have been drawn in this manner, the final end of the segmented line locates the total load and the C.G. position of the airplane for takeoff. If this point is not within the allowable envelope it will be necessary to remove fuel, baggage, or passengers and / or to rearrange baggage and passengers to get the final point to fall within the envelope

Fuel burn-off does not significantly affect the center of gravity.

SAMPLE PROBLEM

A sample problem will demonstrate the use of the weight and balance plotter.

Assume a basic weight and C.G. location of 1300 pounds at 85.00 inches respectively. We wish to carry a pilot and 3 passengers. Two men weighing 180 and 200 pounds will occupy the front seats, and two children weighing 80 and 100 pounds will ride in the rear. Two suitcases weighing 25 pounds and 20 pounds respectively, will be carried in the rear compartment. We wish to carry 48 gallons of fuel. Will we be within the safe envelope?

(a) Place a dot on the plotter grid at 1300 pounds and 85.00 inches to represent the basic airplane. (See illustration Figure 6-17.)
(b) Slide the slotted plastic into position so that the dot is under the slot for the forward seats, at zero weight.
(c) Draw a line up the slot to the 380 pound position (180 + 200) and put a dot.
(d) Continue moving the plastic and plotting points to account for weight in the rear seats (80 + 100), baggage compartment (45), and fuel tanks (288).
(e) As can be seen from the illustration, the final dot shows the total weight to be 2193 pounds with the C.G. at 89.44. This is well within the envelope.

As fuel is burned off, the weight and C.G. will follow down the fuel line and stay within the envelope for landing.

SAMPLE PROBLEM

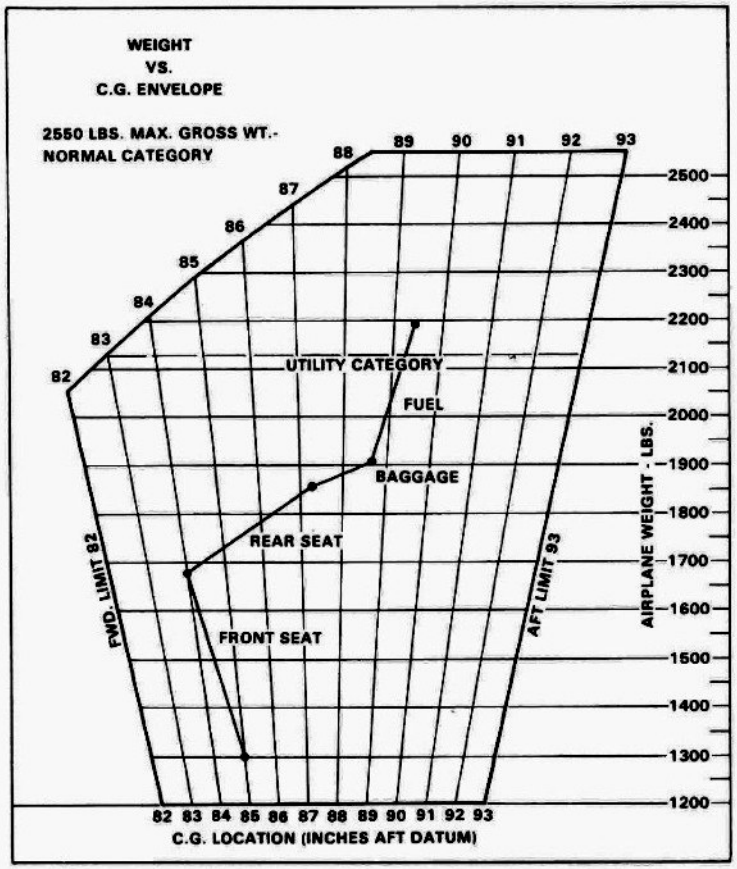

SAMPLE PROBLEM
Figure 6-17

EQUIPMENT LIST

The following is a list of equipment which may be installed in the airplane. Items marked with an "X" were installed on the airplane described below when licensed by the manufacturer. Piper Aircraft Corporation will not revise this equipment list once the aircraft is licensed. It is the owner's responsibility to retain this equipment list and to amend it to reflect changes in equipment installed in this airplane.

Unless otherwise indicated, the installation certification basis for the equipment included in this list is the aircraft's approved type design.

PIPER AIRCRAFT CORPORATION PA-28-181, ARCHER II

SERIAL NO. 2890008 REGISTRATION NO. N9106Z DATE: 9/19/86

(a) Propeller and Propeller Accessories

Item No.	Item	Mark if Instl.	Weight (Pounds)	Arm (In.) Aft Datum	Moment (Lb-In.)
1	Propeller, Sensenich 76EM8S5-0-62 Piper Spec. PS50077-42 Cert. Basis - TC P4EA		34.5	3.8	131
3	Spinner, Piper Dwg. 65805-0				
	a. Bulkhead		1.9	8.6	16
	b. Dome		2.6	-0.3	-1

(b) Engine and Engine Accessories

11	Engine - Lycoming Model				
	a. O-360-A4A Piper Dwg. 62941-17 Cert. Basis - TC 286	———	285.0	20.9	5957
	b. O-360-A4M Piper Dwg. 62941-16 Cert. Basis - TC E286	———	281.0	20.9	5873
13	Oil Filter				
	a. Lycoming No. 75528, (AC #OF5578770)	———	3.3	35.5	117
	b. Lycoming No. LW-13743, (Champion CH-48110) Cert. Basis - TC E286	———	2.8	35.5	99
15	Alternator - 60 Amp				
	a. Chrysler 4111810, Per PAC Dwg. 99945-3	———	13.5	14.0	189
	b. Prestolite ALY 6422, Per PAC Dwg. 99891-0	———	*10.5	14.0	147
17	Engine Driven Fuel Pump Lycoming Dwg. 73297, 74082, 75148 or 75246 Cert. Basis - TC E286		1.7	36.3	62
19	Electric Fuel Pump, Facet Model 478360		1.8	36.8	66
21	Fuel Valve, Piper Dwg. 66945 System Components Corp., P/N SP-2378-B3 or Allen Aircraft Products Inc., P/N 6S122		0.4	61.9	25

*Used only if air conditioner is installed. Weight included in weight of air conditioner installation.

(b) Engine and Engine Accessories (cont)

Item No.	Item	Mark if Instl.	Weight (Pounds)	Arm (In.) Aft Datum	Moment (Lb-In.)
23	Oil Cooler, Piper Dwg. 18622 (Harrison P/N C-8526250) or (Niagara P/N N.D.M. 20002A)		1.9	41.3	78
25	Air Filter, Fram Model CA-161 PL or Purolator AFP-2		0.9	29.5	27
27	Starter, Lycoming No. 76211, (Prestolite MZ4218) Cert. Basis - TC E286		*18.0	14.5	261

(c) Landing Gear and Brakes

35	Two Main Wheel Assemblies, Piper Dwg. 63370-0 & -1		32.3	109.6	3540
	a. Cleveland Aircraft Products Wheel Assembly No. 40-86 Brake Assembly No. 30-55 Cert. Basis - TSO C26a				
	b. Two Main 4-Ply Rating Tires 6.00-6 with Regular Tubes Cert. Basis - TSO C62				
37	One Nose Wheel				
	a. Cleveland Aircraft Products Wheel Assembly No. 40-76B, (Less Brake Drum) Cert. Basis - TSO C26a	———	4.3	31.0	133
	b. McCauley Industrial Corp. Wheel Assembly No. D-30625 Cert. Basis - TSO C26b	———	5.5	31.0	171
	c. One Nose Wheel 4-Ply Rating Tire 6.00-6 with Regular Tube Cert. Basis - TSO C62		8.5	31.0	264
39	Handbrake Master Cylinder, Piper Dwg. 65842 Cleveland Aircraft Products No. 10-22		0.6	60.9	37
41	Toe Brake Cylinders				
	a. Cleveland Aircraft Product No. 10-27	———	0.7	53.0	37
	b. Gar-Kenyon Instruments No. 17000	———	0.4	53.0	21

(d) Electrical Equipment

51	Voltage Regulator, Piper Dwg. 68804-3 or -4		0.4	51.9	21
53	Battery, Piper Dwg. 76454, (Rebat S-25)	———	21.9	168.0	3679
55	Starter Relay, Piper Dwg. 99130-2 (RBM Controls P/N 111-111)		1.0	45.8	46
57	Overvoltage Relay, Piper Dwg. 76454 (Wico X16799)		0.5	55.4	28

*Included in engine weight.

(d) Electrical Equipment (cont)

Item No.	Item	Mark if Instl.	Weight (Pounds)	Arm (In.) Aft Datum	Moment (Lb-In.)
59	Stall Warning Device, Piper Dwg. 76454 (Safe Flight P/N C52207-4)		0.2	80.2	16
61	Stall Warning Horn, Piper Dwg. 76454 (Safe Flight P/N 35214)		0.2	58.8	12
63	Radio Master Switch Relay 6041H298, Piper Dwg. 39870		0.5	59.5	30
	(e) Instruments				
69	Airspeed Indicator, Piper Spec. PS50049-30S Cert. Basis - TSO C2b	———	0.6	61.8	37
71	Altimeter, Piper Spec. PS50008-2 or -3 Cert. Basis - TSO C10b	X ———	1.1	60.9	67
73	Compass Cert. Basis - TSO C7c		0.9	59.9	54
75	Tachometer, Piper Dwg. 62177-14		0.7	61.2	43
77	Engine Cluster (Left), Piper Dwg. 86552-7		0.8	62.4	50
79	Engine Cluster (Right), Piper Dwg. 86552-9		0.8	62.4	50
	(f) Miscellaneous				
91	Forward Seat Belts (2) Piper Spec. PS50039-4-2A American Safety Eqpt. Corp. 500576 Davis Acft. Prod. Inc. FDC-5900-120-5 (Black) Cert. Basis - TSO C22f		1.8	84.0	151
93	Rear Seat Belts (2) Piper Spec. PS50039-4-3 American Safety Eqpt. Corp. 449968 Davis Acft. Prod. Inc. FDC-5900-120-2 (Black) Cert. Basis - TSO C22f		1.6	123.0	197
95	Left Front Seat, Piper Dwg. 89023-2	———	15.5	84.0	1302
97	Right Front Seat, Piper Dwg. 89023-3	———	15.5	84.0	1302
99	Right Rear Seat, Piper Dwg. 89027-3		14.5	123.0	1784
101	Left Rear Seat, Piper Dwg. 89027-2		14.5	123.0	1784
103	Shoulder Harness (2), (Front Seats Only) Piper PS50039-4-20 Pacific Scientific P/N 1107447-13, Black		1.4	119.5	167

(f) Miscellaneous (cont)

Item No.	Item	Mark if Instl.	Weight (Pounds)	Arm (In.) Aft Datum	Moment (Lb-In.)
105	Baggage Straps, Piper Dwg. 66804-0 & 66805-0		1.3	142.8	186
107	Tow Bar, Piper Dwg. 99458-0		1.3	156.0	203
	(g) Engine and Engine Accessories (Optional Equipment)				
115	Carburetor Ice Detector, Piper Dwg. 39684-2	———	0.5	59.7	30
	(h) Propeller and Propeller Accessories (Optional Equipment)				
	(i) Landing Gear and Brakes (Optional Equipment)				
131	Nose Wheel Fairing, Piper Dwg. 37896-3	X ———	3.8	36.3	138
133	Main Wheel Fairings, Piper Dwg. 79893-2, -3	X ———	17.0	113.6	1931
	(j) Electrical Equipment (Optional Equipment)				
141	Instrument Panel Lights, Piper Dwg. 76454	X ———	0.3	62.8	19
143	Instrument Light, Grimes 15-0083-7 or Whelen A300-W-14	X ———	0.1	99.0	10
145	Cabin Light, Piper Dwg. 95229	X ———	0.3	99.0	30
147	Landing Light, G.E., Model 4509	X ———	0.5	13.1	7
149	Wing Tip Recognition Lights Piper Dwg. 87487	———	1.0	94.1	94
150	Navigation Lights (Wing) (2) Red/White & Green/White With White Strobe Whelen Model A600	X ———	5.8	157.9	916
151	Navigation Lights (Wing) (2) Red/White & Green/White With Red Strobe Whelen Model A600	———	5.8	157.9	916
153	Navigation Lights (Wing) (2) Red/White & Green/White Whelen Model A675	———	0.5	106.6	53
155	Navigation Light (Rear) (1), Grimes Model 2064 (White)	———	0.2	281.0	56
157	Rotating Beacon Whelen Eng. Co. P/N WRML-12 Piper Dwg. 63892 or 63518	———	1.5	263.4	395

(j) Electrical Equipment (Optional Equipment) (cont)

Item No.	Item	Mark if Instl.	Weight (Pounds)	Arm (In.) Aft Datum	Moment (Lb-In.)
159	Heated Pitot Head, Piper Dwg. 69041-7		0.4	100.0	40
161	Piper Pitch Trim, Piper Dwg. 67496-3		4.7	145.6	684
163	Battery 12V 35 A.H., Rebat R35 Piper Dwg. 76454		*6.5	168.0	1092
165	Auxiliary Power Receptacle, Piper Dwg. 68815		2.7	178.5	482
167	External Power Cable, Piper Dwg. 62355		4.6	142.8	657
169	Lighter, #200462, 12 Volt, Universal		0.2	62.9	13

(k) Instruments (Optional Equipment)

Item No.	Item	Mark if Instl.	Weight (Pounds)	Arm (In.) Aft Datum	Moment (Lb-In.)
187	Vacuum System Installation, With Airborne Model 211cc Pump		4.5	39.1	176
189	Attitude Gyro, Piper Dwg. 99002-9 Cert. Basis - TSO C4c		2.2	59.4	131
191	Directional Gyro, Piper Dwg. 99003-8 Cert. Basis - TSO C5c		3.3	59.7	197
193	Tru-Speed Indicator, Piper Spec. PS50049-30T Cert. Basis - TSO C2b		(same as standard equipment)		
195	Encoding Altimeter, Piper PS50008-6 or -7 Cert. Basis - TSO C10b, C88		*0.9	60.3	54
197	Altitude Digitizer, (United Instruments P/N 5125-P3) Cert. Basis - TSO C88		1.0	51.5	52
199	Vertical Speed, Piper Dwg. 99010-2, -4 or -5 Cert. Basis - TSO C8b		1.0	65.9	66
201	Alternate Static Source, Piper Dwg. 35493		0.4	61.0	24
203	Turn and Slip Indicator, Piper PS50030-2 or -3 Cert. Basis - TSO C3b		2.6	59.7	155
205	Exhaust Gas Temperature, Piper Dwg. 99026		0.7	55.4	39
207	Engine Hour Meter, Piper Dwg. 79548-0		0.3	61.2	18
209	Clock		0.4	62.4	25
211	Control Wheel Digital Clock, Piper Dwg. 87347-3		0.3	71.9	22
213	Air Temperature Gauge, Piper Dwg. 99479-0 or -2		0.2	72.6	15

*Weight and moment difference between standard and optional equipment.

(l) Autopilots (Optional Equipment)

Item No.	Item	Mark if Instl.	Weight (Pounds)	Arm (In.) Aft Datum	Moment (Lb-In.)
223	Century 21 Autopilot with Directional Gyro 52D254 Cert. Basis - STC SA3352SW		8.7 3.3	72.6 59.4	632 196
225	King KAP 100 Autopilot, Piper Dwg. 39874-( ) Cert. Basis - STC SA1565CE-D		15.2	97.4	1480
227	King KAP 100 Autopilot with KCS 55A Compass System, Piper Dwg. 39874-( ) Cert. Basis - STC SA1565CE-D		21.2	113	2396
229	King KAP 150 Autopilot, Piper Dwg. 39874-( ) Cert. Basis - STC SA1565CE-D		21.2	115.2	2442
231	King KAP 150 Autopilot with KCS 55A Compass System, Piper Dwg. 39874-( ) Cert. Basis - STC SA1565CE-D		27.2	137	3726

(m) Radio Equipment (Optional Equipment)

Item No.	Item	Mark if Instl.	Weight (Pounds)	Arm (In.) Aft Datum	Moment (Lb-In.)
245	Collins VHF-250 or VHF-251 Comm Transceiver a. Single b. Dual Cert. Basis - TSO C37b, C38b		4.0 8.1	56.9 56.9	228 461
247	Collins VIR-350 or VIR-351 Nav Receiver a. Single b. Dual Cert. Basis - TSO C40a, C36c		3.9 7.9	57.4 57.4	224 453
249	Collins IND-350 ( ) VOR/LOC Indicator a. Single b. Dual Cert. Basis - TSO C40a, C36c		1.0 2.0	60.2 60.2	60 120
251	Collins IND-351 ( ) VOR/LOC/GS Indicator Cert. Basis - TSO C40a, C36c		1.3	60.2	78
253	Collins GLS-350 Glide Slope Receiver Cert. Basis - TSO C34c		2.0	181.8	364
255	Collins DME-451 w/IND. 451/450 Cert. Basis - TSO C66a		8.0	174.9	1399
257	Collins RCR-650A ADF Receiver and Antenna and IND-650A Indicator Cert. Basis - TSO C41c		6.6	104.8	692
259	Collins AMR-350 Audio/Marker Panel Cert. Basis - TSO C35d, C50b		*3.3	110.0	363

*Weight includes antenna and cable.

(m) Radio Equipment (Optional Equipment) (cont)

Item No.	Item	Mark if Instl.	Weight (Pounds)	Arm (In.) Aft Datum	Moment (Lb-In.)
261	Collins TDR-950 Transponder Cert. Basis - TSO C74c	____	*2.8	62.9	176
263	King - KN 53 Nav/ Receiver	____	2.8	63.8	179
265	King - KN 53 Nav/ Receiver w/ G.S. Receiver a. Single b. Dual	____ ____	3.1 6.2	63.8 63.8	198 396
267	King KX 155 VHF Comm/ Nav Receiver a. b. With Glide Slope Receiver c. Without Glide Slope Receiver Cert. Basis - TSO C37b, C38b, C40a, C36a	____ ____ ____	5.0 5.3 4.8	58.1 58.1 58.1	291 308 279
269	King KX 165 VHF Comm/ Nav Receiver a. With Glide Slope Receiver b. Without Glide Slope Receiver Cert. Basis - TSO C37b, C38b, C40a, C36a	____ ____	5.7 5.1	58.0 58.1	331 296
271	King KY 196E Transceiver with RB 125 Power Booster a. Single b. Dual Cert. Basis - TSO C37b, C38b	____ ____	5.7 11.4	77.0 77.0	439 878
273	King KY-197 Transceiver Cert. Basis - TSO C37b, C38b a. Single b. Dual	____ ____	4.2 8.4	58.7 58.7	247 493
275	King KI 202 VOR/ LOC Indicator Cert. Basis - TSO C40a, C36c	____	1.3	60.9	79
277	King KI 203 VOR/ LOC Indicator Cert. Basis - TSO C36c, C40a	____	1.6	59.9	96
279	King KI 204 VOR/ LOC/ GS Indicator Cert. Basis - TSO C34c, C36c, C40a	____	1.7	60.0	102.0
281	King KI 206 VOR/ LOC/ GS Indicator Cert. Basis - TSO C40a, C36c, C34c	____	1.3	60.9	79
283	King KI 208 VOR/ LOC Indicator a. Single b. Dual Cert. Basis - TSO C36c, C40a	3.12.86 R.R. Flood ____ X	1.0 2.0	59.6 59.9	60 120
285	King KI 209 VOR/ LOC/ GS Indicator Cert. Basis - TSO C34c, C36c, C40a	____	1.2	59.9	72
287	King KNS 80 RNAV	____	7.0	56.6	396
288	N°2 KING KX 155 R.R. 3.12.86 Flood		5.0	58.1	291

*Weight includes antenna.

(m) Radio Equipment (Optional Equipment) (cont)

Item No.	Item	Mark if Instl.	Weight (Pounds)	Arm (In.) Aft Datum	Moment (Lb-In.)
289	King ~~KN 60A~~ or KN 64 DME DIABASE 31.8.88	X	3.3	58.3	192
291	King KR-86 ADF with KA-42B Loop and Sense Antenna a. First b. Second c. Audio Amplifier	____ ____ ____	7.6 10.6 0.8	91.6 107.0 51.0	696 1134 41
293	King KR 87 ADF Receiver/ Indicator a. Single b. KA 44B Antenna (Single) c. Audio Amplifier Cert. Basis - TSO C41c	____ ____ ____	4.0 3.6 0.8	59.0 150.6 51.0	236 542 41
294	KING KA 134 AUDIO PANEL R.R. 3.12.86 Flood	X	0.8	65.3	52
295	King KMA-24 Audio Control Panel Cert. Basis - TSO C35d, C50b	____	1.7	65.3	111
297	King KT 76( )/ 78( ) Transponder Cert. Basis - TSO C74b	____	*3.1	58.1	180
299	King KT 79 Transponder Cert. Basis - TSO C47c	____	*3.9	57.6	225
301	King KRA-10 Radio Altimeter	____	4.3	162.6	699
303	Narco Mark 12D Comm-Nav w/ G.S. Cert. Basis - TSO C34c Class D	____	5.2	57.9	301
305	Narco Mark 12D Comm-Nav without G.S. Cert. Basis - TSO C34c Class D	____	4.8	57.9	278
307	Narco Comm 810 TSO a. Single b. Dual Cert. Basis - TSO C37b, C38b	____ ____	4.0 8.0	57.5 57.5	230 460
309	Narco Nav 824 TSO a. Single b. Dual Cert. Basis - TSO C36c, C40a	____ ____	5.0 10.0	57.5 57.5	288 575
311	Narco Nav 825 TSO a. Single b. Dual Cert. Basis - TSO C36c, C40a, C34c	____ ____	5.4 10.8	57.5 57.5	311 621
313	Narco ID 824 Indicator TSO a. Single b. Dual Cert. Basis - TSO C36c, C40a	____ ____	.9 1.8	60.8 60.8	55 109
314	PS Eng. Intercom PM-1000 wiring	AVIONTEC AG BAZL 140	5186 0.5 2nd 0.8	61.0 80.0	30.50 64.00

* Weight includes marker antenna and cable.

(m) Radio Equipment (Optional Equipment) (cont)

Item No.	Item	Mark if Instl.	Weight (Pounds)	Arm (In.) Aft Datum	Moment (Lb-In.)
315	Narco ID 825 Indicator TSO				
	a. Single	____	1.0	60.8	61
	b. Dual	____	2.0	60.8	122
	Cert. Basis - TSO C36c, C40a, C34c				
317	Narco CP 136M Audio Selector Panel				
	Cert. Basis - TSO C50b, C35d	____	1.9	59.8	114
319	Narco DME - 890	____	*5.0	64.4	322
321	Narco DME - 891 Indicator	____	3.3	68.5	226
323	Narco ADF-841				
	Cert. Basis - TSO C41c	____	*8.4	106.9	898
325	Narco AT-150 Transponder, Cert Basis - TSO C74c	____	**3.0	57.3	172
	a. Narco AR-500 Altitude Encoder				
	Cert. Basis - TSO C88	____	1.0	51.5	52
	b. Narco AR-850 Altitude Encoder				
	Piper Dwg. 79658, Cert. Basis - TSO C88 (a)	X	.7	51.5	36
327	Antenna and Cable				
	a. Nav Receiving VRP-37 or AV-12PPR	X	1.4	195.7	274
	b. #1 VHF Comm PS50040-18	X	1.4	144.3	202
	c. #2 VHF Comm PS50040-18	X	1.5	170.7	256
329	Marker Beacon Antenna, Conant CI-102				
	Piper Dwg. 39737-4	____	***1.2	175.0	210
331	Emergency Locator Transmitter, (Narco Model ELT-10) AMERI-KING AK-450	X	3.5	236.2	827
	a. Antenna and Coax	X	0.5	224.4	112
	b. Shelf and Access Hole	X	0.5	235.4	118
333	Microphone				
	a. Piper Dwg. 68856-12 (100T)	X'	0.3	69.9	21
335	Boom Mike Headset, Telex Airman 750	____	0.3	80.5	24
337	Cabin Speaker, Piper Dwg. 99220	X'	1.1	99.0	109
339	Headset, Piper Dwg. 68856-10	X	0.5	60.0	30
341	Avionics Cooling Fan Globe P/N 19A6009 14V				
	Piper Dwg. 39857-3	____	0.9	56.4	51
342	Horizontal Situation Indicator				
	Mitchell P/N NSD 360A				
	Cert. Basis TSO, C6C, C9C, C52A	____	8.2	115	942
343	GPS GARMIN 155 XL AIRLA Stawicki 17.3.03	X	**3.2	60.0	192

*Weight includes antenna, cable, receiver, and plate assembly.
**Weight includes antenna and cable.
***Includes antenna coax wire to marker beacon receiver.

(n) Miscellaneous (Optional Equipment)

Item No.	Item	Mark if Instl.	Weight (Pounds)	Arm (In.) Aft Datum	Moment (Lb-In.)
365	Zinc Chromate Finish, Piper Dwg. 79700-2	X'	5.0	158.0	790
367	Stainless Steel Control Cables, Piper Dwg. 79700	____	—	—	—
369	Air Conditioner and Alternator Instl. Piper Dwg. 99575-3	____	68.3	103.6	7076
371	Overhead Vent System, Piper Dwg. 79853-2	____	5.7	148.9	849
373	Overhead Vent System with Ground Ventilating Blower Piper Dwg. 79853-3	X	14.2	168.5	2393
375	Assist Step, Piper Dwg. 65584	X	1.8	156.0	281
377	Super Cabin Sound Proofing, Piper Dwg. 79601-3 (Except cabin door window)	X	XXXX 17.5	86.8	XXXX 1519
379	Adjustable Front Seat (Left) Piper Dwg. 89026-2	X'	*6.6	80.7	533
381	Adjustable Front Seat (Right) Piper Dwg. 89026-3	X'	*6.8	80.0	544
383	Headrests (2) Front, Piper Dwg. 89028-2	X	2.2	94.5	208
385	Headrests (2) Rear, Piper Dwg. 89028-2	X	2.2	132.1	291
387	Leather Seat Trim, Piper PMS 2100S	X'	1.6	104.5	167
389	Shoulder Harness - Inertia (Rear) (2)				
	Piper PS50039-4-10				
	Pacific Scientific 1107447-01 (Black)	X	1.3	140.3	182
391	Assist Strap, Piper Dwg. 79455	____	0.2	109.5	22
393	Curtain and Rod Installation, Piper Dwg. 67955-2	X'	4.2	124.0	521
397	Fire Extinguisher				
	Piper Dwg. 37872-2, Graviner HA1014-01	____	5.6	57.9	324
399	Locking Gas Cap, Piper Dwg. 39830-2	____	*0.1	94.1	9
401	Crew Cup Holders (2), Piper Dwg. 87453	X'	0.1	62.8	6
403	Approach Plate Holder (2) (On Control Wheel)				
	Piper Dwg. 37907	____	0.2	74.0	15
405	Static Wicks (6) @	____	0.3	135.6	41
	Static Wicks (3) @	____	0.2	272.5	55
	Piper Dwg. 78947				
	Stand-by Vacuum System Installation	X'	15.5	42.5	659
19.5.87 AIRBASE 406	Lütolf Hour Meter	X	0.8	61.5	49

*Weight and moment difference between standard and optional equipment.

(n) Miscellaneous (Optional Equipment) (cont)

Item No.	Item	Mark if Instl.	Weight (Pounds)	Arm (In.) Aft Datum	Moment (Lb-In.)
407	Transponder Remote Ident (Switch In Control Wheel) Piper Dwg. 39693		Neg.	Neg.	Neg.
409	Tinted Windows, Piper Dwg. 76361	X	Neg.	Neg.	Neg.
	TOTAL OPTIONAL EQUIPMENT	Superseded	~~174.9~~	~~105.6~~	Armin Leicht BAZ/AMS No. 3 ~~[illegible]~~ MécanAir
410	Silencer MECANAIR STC No. 2073 - 2073-23	X	22	33.86	244

TABLE OF CONTENTS

SECTION 7

DESCRIPTION AND OPERATION OF THE AIRPLANE AND ITS SYSTEMS

Paragraph No.		Page No.
7.1	The Airplane	7-1
7.3	Airframe	7-1
7.5	Engine and Propeller	7-1
7.7	Landing Gear	7-3
7.9	Flight Controls	7-5
7.11	Engine Controls	7-7
7.13	Fuel System	7-7
7.15	Electrical System	7-10
7.17	Vacuum System	7-13
7.19	Instrument Panel	7-14
7.21	Pitot-Static System	7-16
7.23	Heating and Ventilating System	7-19
7.25	Cabin Features	7-19
7.27	Baggage Area	7-20
7.29	Stall Warning	7-20
7.31	Finish	7-21
7.33	Air Conditioning	7-21
7.35	Piper External Power	7-22
7.37	Emergency Locator Transmitter	7-23
7.39	Carburetor Ice Detection System	7-27

SECTION 7

DESCRIPTION AND OPERATION OF THE AIRPLANE AND ITS SYSTEMS

7.1 THE AIRPLANE

The PA-28-181 Archer II is a single-engine, low-wing monoplane of all metal construction. It has four-place seating, two hundred pound baggage capacity, and a 180 horsepower engine.

7.3 AIRFRAME

The basic airframe, except for a tubular steel engine mount, steel landing gear struts, and other miscellaneous steel parts, is of aluminum alloy construction. The extremities - the wing tips, the cowling, the tail surfaces - are of fiberglass or ABS thermoplastic. Aerobatics are prohibited in this airplane since the structure is not designed for aerobatic loads.

The semi-tapered wings have a laminar flow type NACA 652-415 airfoil. The wings are attached to each side of the fuselage by insertion of the butt ends of the respective main spars into a spar box carry-through which is an integral part of the fuselage structure, providing, in effect, a continuous main spar with splices at each side of the fuselage. There are also fore and aft attachments at the rear spar and at an auxiliary front spar.

7.5 ENGINE AND PROPELLER

The Archer II is powered by a four cylinder, direct drive, horizontally opposed engine rated at 180 horsepower at 2700 rpm. It is furnished with a starter, a 60 ampere, 14 volt alternator, a shielded ignition, vacuum pump drive, a fuel pump, and a dry, automotive type carburetor air filter.

The exhaust system is made entirely from stainless steel and is equipped with dual mufflers. A heater shroud around the mufflers is provided to supply heat for the cabin and windshield defrosting.

The fixed-pitch propeller is made from a one-piece alloy forging.

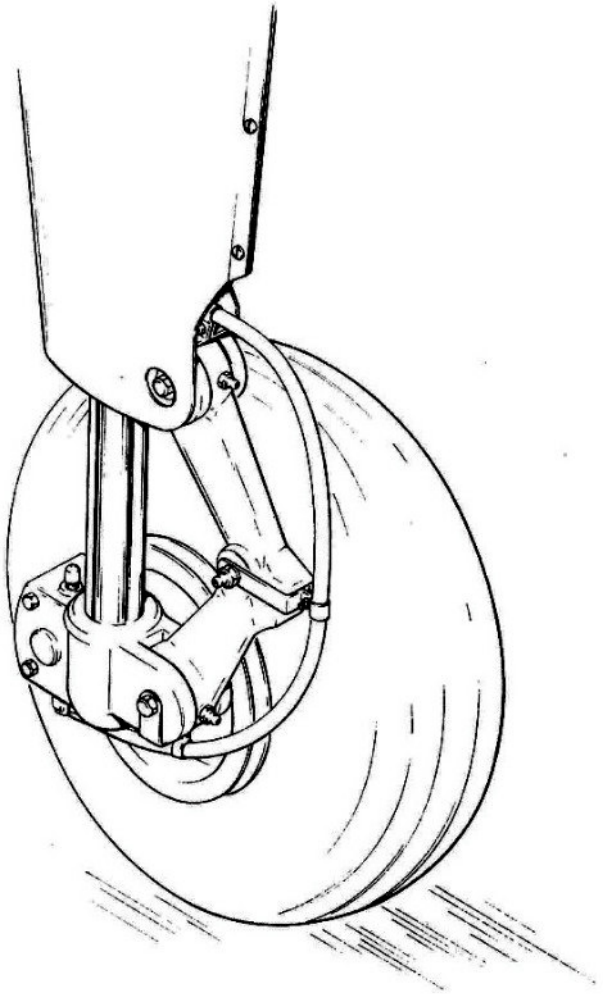

MAIN WHEEL ASSEMBLY
Figure 7-1

7.7 LANDING GEAR

The three landing gears use Cleveland 6.00 x 6 wheels, the main gear wheels (Figure 7-1) being provided with brake drums and Cleveland single disc hydraulic brake assemblies. All three wheels use 6.00 x 6, four-ply rating, Type III tires with tubes.

A spring device is incorporated in the rudder pedal torque tube assembly to provide rudder trim. A bungee in the nose gear steering mechanism reduces steering effort and dampens bumps and shocks during taxiing. By using the rudder pedals and brakes the nose gear is steerable through a 30 degree arc each side of center. Later aircraft have the bungee removed from the nose gear steering mechanism and are steerable through a 20 degree arc each side of center. A shimmy dampener is also included in the nose gear.

The three struts are of the air-oil type, with a normal extension of 3.25 inches for the nose gear and 4.50 inches for the main gear.

The standard brake system consists of dual toe brakes attached to the rudder pedals and a hand lever and master cylinder located below and behind the left center of the instrument sub-panel. The toe brakes and the hand brake have their own brake cylinders, but they share a common reservoir. The brake fluid reservoir is installed on the top left front face of the fire wall. The parking brake is incorporated in the master cylinder and is actuated by pulling back on the brake lever, depressing the knob attached to the left side of the handle, and releasing the brake lever. To release the parking brake, pull back on the brake lever to disengage the catch mechanism and allow the handle to swing forward (refer to Figure 7-5).

THIS PAGE INTENTIONALLY LEFT BLANK

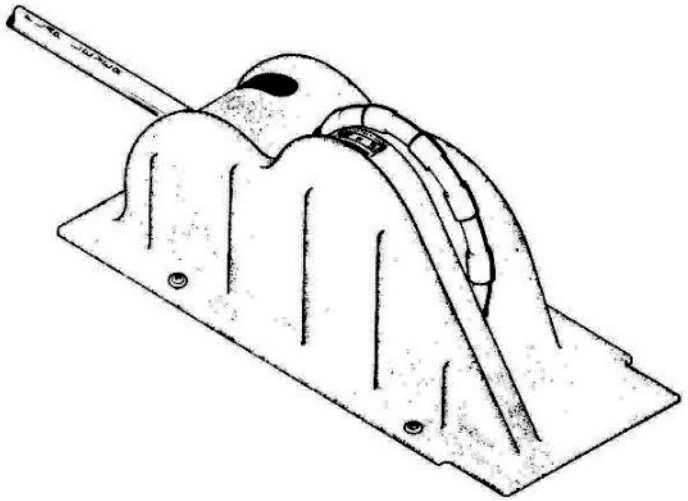

FLIGHT CONTROL CONSOLE
Figure 7-3

7.9 FLIGHT CONTROLS

Dual controls are provided as standard equipment, with a cable system used between the controls and the surfaces. The horizontal tail (stabilator) is of the all-movable slab type with a trim tab mounted on the trailing edge of the stabilator to reduce the control system forces. This tab is actuated by a control wheel on the floor between the front seats (Figure 7-3).

A rudder trim adjustment is mounted on the right side of the pedestal below the throttle quadrant and permits directional trim as needed in flight (refer to Figure 7-5).

The flaps are manually operated and spring-loaded to return to the up position. A past-center lock incorporated in the actuating linkage holds the flap when it is in the up position so that it may be used as a step on the right side. The flap will not support a step load except when in the full up position, so it must be completely retracted when used as a step. The flaps have three extended positions, 10, 25 and 40 degrees.

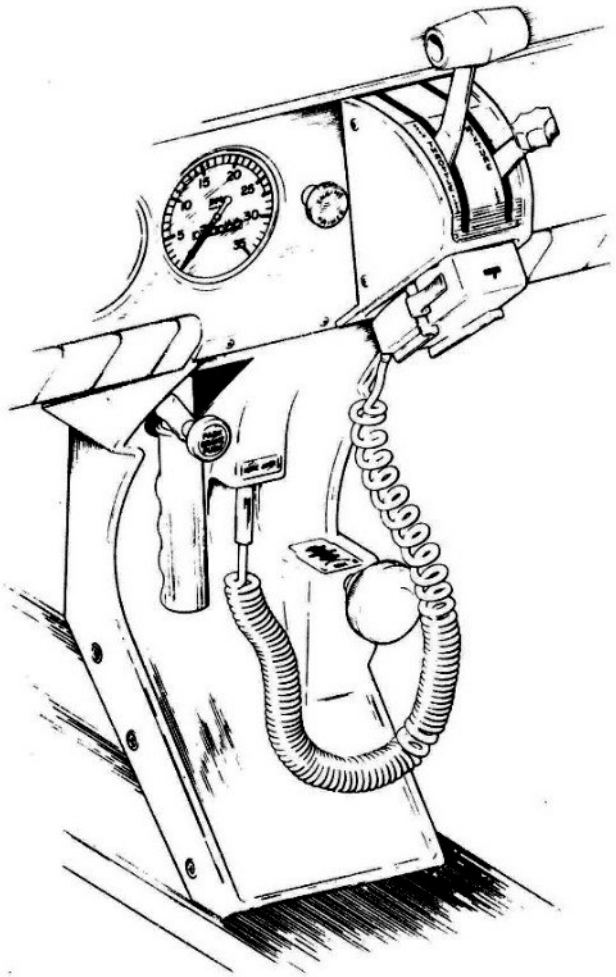

CONTROL QUADRANT AND CONSOLE
Figure 7-5

7.11 ENGINE CONTROLS

Engine controls consist of a throttle control and a mixture control lever. These controls are located on the control quadrant on the lower center of the instrument panel (Figure 7-5) where they are accessible to both the pilot and the copilot. The controls utilize teflon-lined control cables to reduce friction and binding.

The throttle lever is used to adjust engine RPM. The mixture control lever is used to adjust the air to fuel ratio. The engine is shut down by the placing of the mixture control lever in the full lean position. For information on the leaning procedure, see Section 4.27 of this Handbook.

The friction adjustment lever on the right side of the control quadrant may be adjusted to increase or decrease the friction holding the throttle and mixture controls or to lock the controls in a selected position.

The carburetor heat control lever is located to the right of the control quadrant on the instrument panel. The control is placarded with two positions: "ON" (down), "OFF" (up).

7.13 FUEL SYSTEM

Fuel is stored in two twenty-five gallon (24 gallons usable) tanks which are secured to the leading edge structure of each wing by screws and nut plates. Each tank is equipped with a filler neck indicator tab to aid in determining fuel remaining when the tanks are not full. Usable capacity to the bottom of the indicator tab is 17 gallons.

The fuel selector control (Figure 7-7) is located on the left side-panel, forward of the pilot's seat. The button on the selector cover must be depressed and held while the handle is moved to the OFF position. The button releases automatically when the handle is moved back into the ON position.

An auxiliary electric fuel pump is provided in case of failure of the engine driven pump. The electric pump should be on for all takeoffs and landings, and when switching tanks. The pump switch is located in the switch panel above the throttle quadrant.

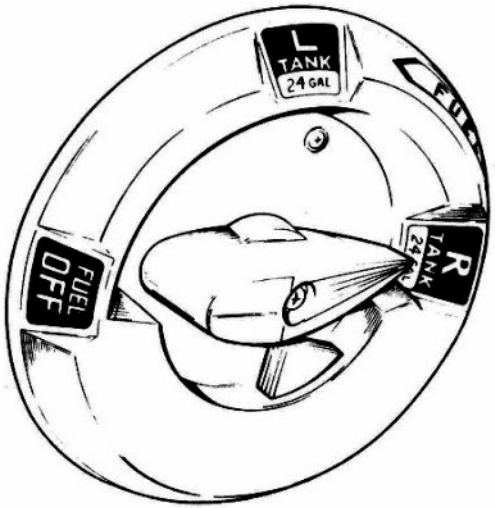

FUEL SELECTOR
Figure 7-7

The fuel drains should be opened daily prior to first flight to check for water or sediment and proper fuel. Each tank has an individual drain at the bottom, inboard rear corner.

A fuel strainer, located on the lower left front of the fire wall, has a drain which is accessible from outside the nose section. The strainer should also be drained before the first flight of the day. Refer to paragraph 8.21 for the complete fuel draining procedure.

Fuel quantity and pressure are indicated on gauges located in a cluster on the left side of the instrument panel.

An engine priming system is provided to facilitate starting. The primer pump is located to the immediate left of the throttle quadrant (refer to Figure 7-5).

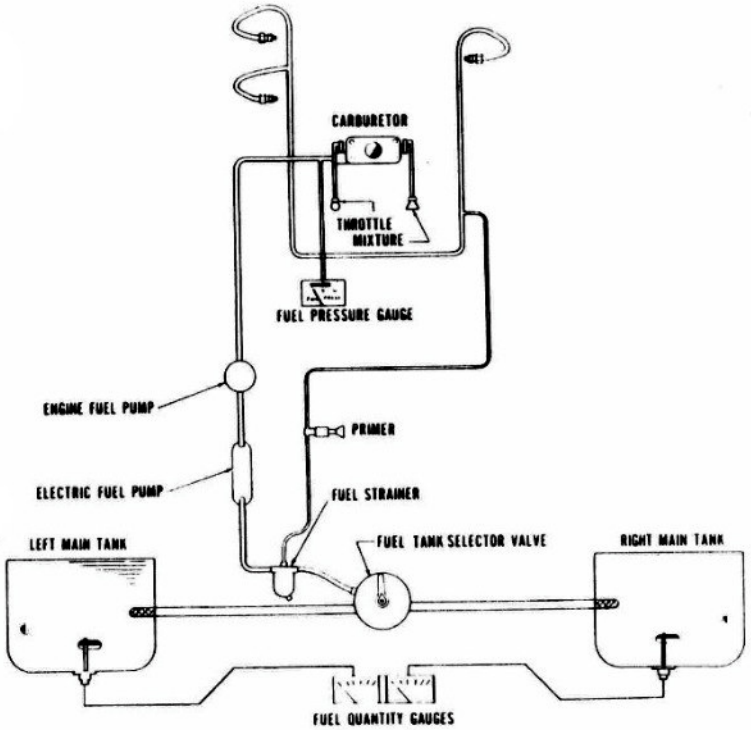

FUEL SYSTEM SCHEMATIC
Figure 7-9

7.15 ELECTRICAL SYSTEM

The electrical system includes a 14-volt, 60 amp alternator, a 12-volt battery, a voltage regulator, an overvoltage relay and a master switch relay (Figure 7-11). The battery is mounted in a plastic box immediately aft of the baggage compartment. The regulator and overvoltage relay are located on the forward left side of the fuselage behind the instrument panel.

Electrical switches are located on the right center instrument panel, and the circuit breakers are located on the lower right instrument panel. A rheostat switch on the left side of the switch panel controls the navigational lights and the radio lights. The similar switch on the right side controls and dims the panel lights.

Standard electrical accessories include a starter, electric fuel pump, stall warning indicator, cigar lighter, fuel gauge, ammeter, and annunciator panel.

The annunciator panel includes alternator and low oil pressure indicator lights. When the optional gyro system is installed, the annunciator panel also includes a low vacuum indicator light. The annunciator panel lights are provided only as a warning to the pilot that a system may not be operating properly, and that he should check and monitor the applicable system gauge to determine when or if any necessary action is required.

Optional electrical accessories include navigation lights, wing recognition light, anti-collision light, landing light, instrument lighting, and cabin dome light. Circuits will handle the addition of communications and navigational equipment.

An optional light, mounted in the overhead panel, provides instrument and cockpit lighting for night flying. The light is controlled by a rheostat switch located adjacent to the light. A map light window in the lens is actuated by an adjacent switch.

An optional wing tip/recognition light system consists of 2 lights (one in each wing tip) and is operated by a split landing light/recognition light rocker type switch mounted on the switch panel.

WARNING

Anti-collision lights should not be operating when flying through cloud, fog or haze, since the reflected light can produce spatial disorientation. Strobe lights should not be used in close proximity to the ground such as during taxiing, takeoff or landing.

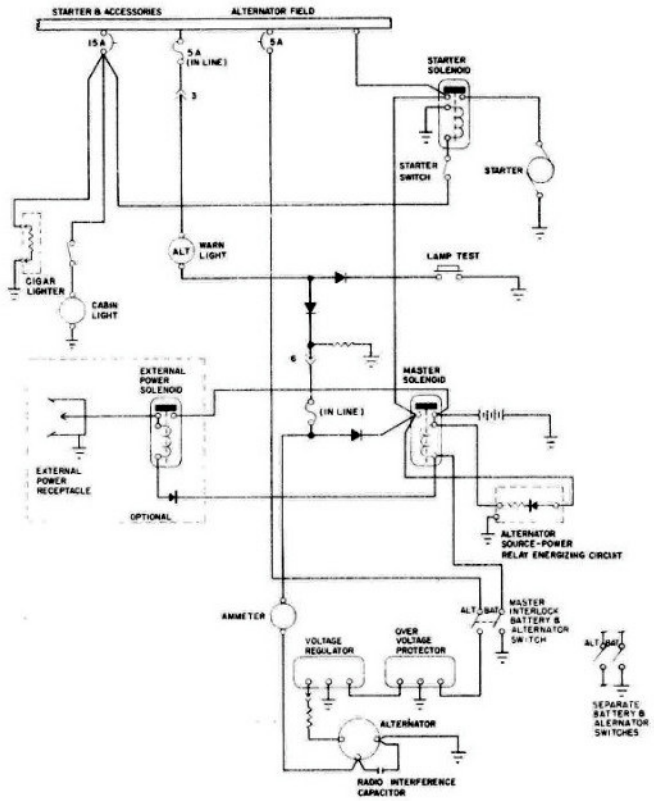

ALTERNATOR AND STARTER SCHEMATIC
Figure 7-11

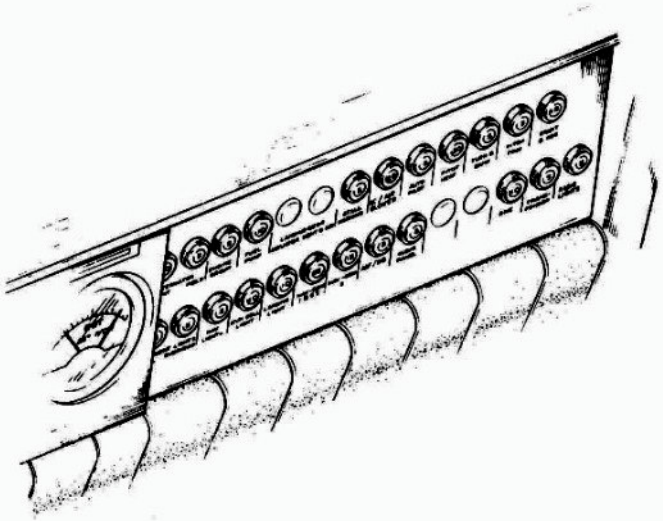

CIRCUIT BREAKER PANEL
Figure 7-13

NOTE

On airplanes with interlocked BAT and ALT switches, the ALT switch is mechanically interlocked with the BAT switch. When the ALT switch is turned ON, the BAT switch will also be turned ON. On airplanes with separate BAT and ALT switch operation, the switches may be positioned independently as desired.

Unlike previous generator systems, the ammeter does not indicate battery discharge; rather it displays in amperes the load placed on the alternator. With all electrical equipment off (except master switch) the ammeter will be indicating the amount of charging current demanded by the battery. As each item of electrical equipment is turned on, the current will increase to a total appearing on the ammeter. This total includes the battery. The average continuous load for night flight, with radios on, is about 30 amperes. This 30 ampere value, plus approximately two amperes for a fully charged battery, will appear continuously under these flight conditions. The

amount of current shown on the ammeter will tell immediately if the alternator system is operating normally, as the amount of current shown should equal the total amperage drawn by the equipment which is operating.

CAUTION

Do not use cigar lighter receptacles as power sources for any devices other than the cigar lighters supplied with the airplane. Any other device plugged into these receptacles may be damaged.

For abnormal and/or emergency operation and procedure, see Section 3.

7.17 VACUUM SYSTEM

The vacuum system is designed to operate the air driven gyro instruments. This includes the directional and attitude gyros when installed. The system consists of an engine driven vacuum pump, a vacuum regulator, a filter and the necessary plumbing.

The vacuum pump is a dry type pump which eliminates the need for an air/oil separator and its plumbing. A shear drive protects the pump from damage. If the drive shears, the gyros will become inoperative.

The vacuum gauge, mounted on the right instrument panel to the right of the radios, provides valuable information to the pilot about the operation of the vacuum system. A decrease in pressure in a system that has remained constant over an extended period may indicate a dirty filter, dirty screens, possibly a sticking vacuum regulator or leak in system (a low vacuum indicator light is provided in the annunciator panel). Zero pressure would indicate a sheared pump drive, defective pump, possibly a defective gauge or collapsed line. In the event of any gauge variation from the norm, the pilot should have a mechanic check the system to prevent possible damage to the system components or eventual failure of the system.

A vacuum regulator is provided in the system to protect the gyros. The valve is set so the normal vacuum reads 5.0 ± .1 inches of mercury, a setting which provides sufficient vacuum to operate all the gyros at their rated RPM. Higher settings will damage the gyros and with a low setting the gyros will be unreliable. The regulator is located behind the instrument panel and is accessible from below the instrument panel.

7.19 INSTRUMENT PANEL

The instrument panel (Figure 7-15) is designed to accommodate instruments and avionics equipment for VFR and IFR flights.

The radios and the circuit breakers are located on the upper and lower right panel respectively, and have circuits provided for the addition of optional radio equipment. An optional radio master switch is located near the top of the instrument panel between the radio stacks. It controls the power to all radios through the aircraft master switch. An emergency bus switch is also provided to provide auxiliary power to the avionics bus in event of a radio master switch circuit failure. The emergency bus switch is located behind the lower right shin guard left of the circuit breaker panel. An engine cluster is located to the right of the pilot control wheel and includes a fuel pressure gauge, a right and left main fuel quantity gauge, an oil temperature gauge and an oil pressure gauge.

Standard instruments include a compass, an airspeed indicator, a tachometer, an altimeter, an ammeter, an engine cluster, and an annunciator panel. The compass is mounted on the windshield bow in clear view of the pilot. The annunciator panel is mounted in the upper instrument panel to warn the pilot of a possible malfunction in the alternator, oil pressure, or vacuum systems.

Instrument options available for the panel includes a suction gauge, vertical speed indicator, attitude gyro, directional gyro, clock, tru-speed indicator and turn and slip indicator or turn coordinator. The attitude gyro and directional gyro are vacuum operated through the use of a vacuum pump installed on the engine, while the turn and slip indicator is electrically operated. The vacuum suction gauge is on the far right of the instrument panel.

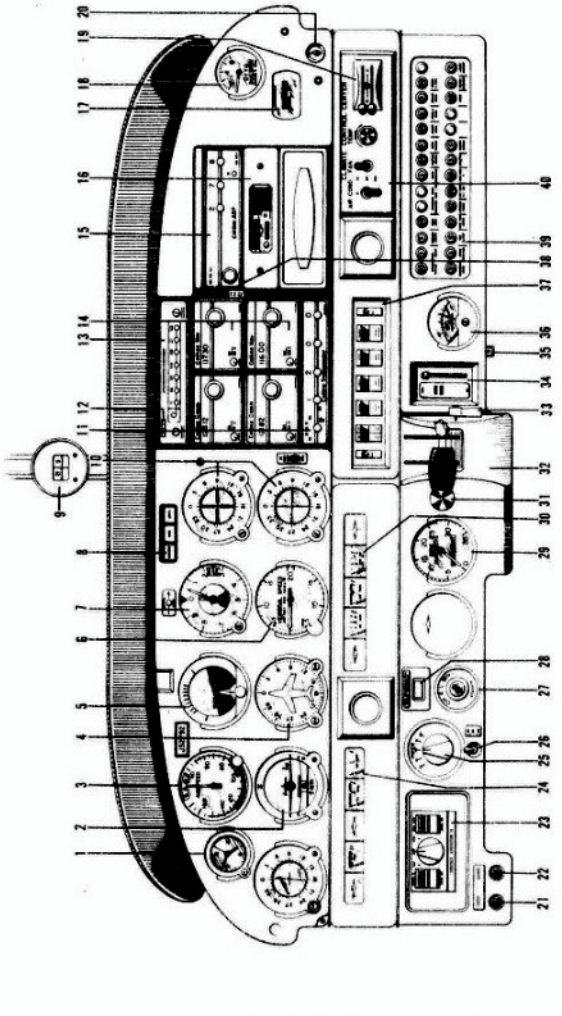

1. CLOCK
2. TURN INDICATOR
3. AIRSPEED INDICATOR
4. DIRECTIONAL GYRO
5. ATTITUDE GYRO
6. VERTICAL SPEED INDICATOR
7. ALTIMETER
8. ANNUNCIATOR PANEL
9. MAGNETIC COMPASS
10. OMNI & GLIDE SLOPE INDICATORS
11. TRANSPONDER
12. MARKER BEACON
13. AUDIO SELECTOR PANEL
14. VHF TRANSCEIVERS
15. ADF RECEIVER
16. DME RECEIVER
17. ENGINE HOUR METER
18. SUCTION GAUGE
19. HEAT & DEFROST CONTROL
20. CIGAR LIGHTER
21. MIKE JACK
22. PHONE JACK
23. AUTOPILOT
24. ENGINE INSTRUMENT CLUSTER
25. OMNI COUPLER
26. NAV SWITCH
27. MAGNETO & STARTER SWITCH
28. PITCH CONTROL
29. TACHOMETER
30. FUEL GAUGES
31. PRIMER
32. THROTTLE QUADRANT
33. FRICTION LOCK
34. CARBURETOR HEAT CONTROL
35. EMERGENCY BUS SWITCH
36. EGT INDICATOR
37. INSTRUMENT PANEL LIGHTS
38. RADIO MASTER SWITCH
39. CIRCUIT BREAKER PANEL
40. CLIMATE CONTROL

INSTRUMENT PANEL
Figure 7-15

7.21 PITOT-STATIC SYSTEM

The system supplies both pitot and static pressure for the airspeed indicator, altimeter, and the optional vertical speed indicator (Figure 7-17).

Pitot and static pressure are picked up by a pitot head installed on the bottom of the left wing and carried through pitot and static lines within the wing and fuselage to the gauges on the instrument panel.

An alternate static source is available as optional equipment. The control valve is located below the left side of the instrument panel. When the valve is set in the alternate position, the altimeter, vertical speed indicator and airspeed indicator will be using cabin air for static pressure. The storm window and cabin vents must be closed and the cabin heater and defroster must be on during alternate static source operation. The altimeter error is less than 50 feet unless otherwise placarded.

Both the pitot and static lines can be drained through separate drain valves located on the left lower side of the fuselage interior.

A heated pitot head, which alleviates problems with icing and heavy rain, is available as optional equipment. The switch for the heated pitot head is located on the electrical switch panel to the left of the right control wheel.

To prevent bugs and water from entering the pitot and static pressure holes, a cover should be placed over the pitot head. A partially or completely blocked pitot head will give erratic or zero readings on the instruments.

NOTE

During the preflight, check to make sure the pitot cover is removed.

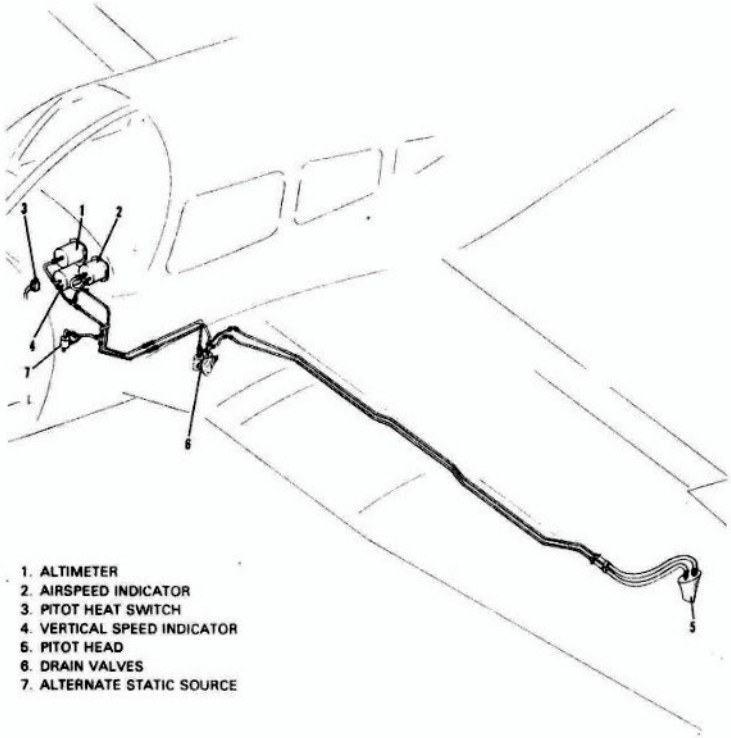

PITOT-STATIC SYSTEM
Figure 7-17

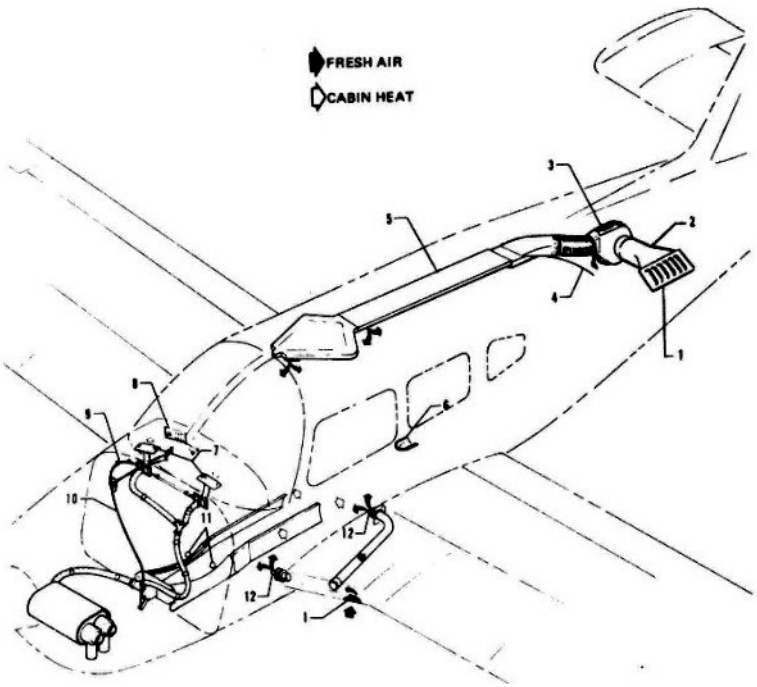

1. FRESH AIR INLET
2. INLET DUCT
3. FRESH AIR BLOWER
4. BULKHEAD ASSEMBLY
5. FRESH AIR DUCT
6. CABIN EXHAUST OUTLET
7. DEFROSTER OUTLET
8. BLOWER SWITCH PANEL
9. DEFROSTER CONTROL
10. HEATER CONTROL
11. CABIN HEAT DIVERSION CONTROL
12. FRESH AIR CONTROL

HEATING AND VENTILATING SYSTEM
Figure 7-19

7.23 HEATING AND VENTILATING SYSTEM

Heat for the cabin interior and the defroster system is provided by a heater muff attached to the exhaust system (Figure 7-19). The amount of heat desired can be regulated with the controls located on the far right side of the instrument panel.

The air flow can be regulated between the front and rear seats by levers located on top of the heat ducts next to the console.

Fresh air inlets are located in the leading edge of the wing near the fuselage. An adjustable outlet is located on the side of the cabin near the floor at each seat location; overhead air outlets are offered as optional equipment. Air is exhausted through an outlet under the rear seat. A cabin air blower, incorporated in the ventilating system, is also available as optional equipment. An optional overhead ventilating system with a cabin air blower is available on models without air conditioning. This blower is operated by a FAN switch with 3 positions - "OFF," "LOW," "HIGH."

CAUTION

When cabin heat is operated, heat duct surface becomes hot. This could result in burns if arms or legs are placed too close to heat duct outlets or surface.

7.25 CABIN FEATURES

For ease of entry and exit and pilot-passenger comfort, the front seats are adjustable fore and aft. The rear seats may be removed to provide room for bulky items. Rear seat installations incorporate leg retainers with latching mechanisms which must be released before the rear seats can be removed. Releasing the retainers is accomplished on earlier models by turning the latching mechanisms 90° with a coin or screwdriver. Releasing the retainers is accomplished on later models by depressing the plunger behind each rear leg. Armrests are also provided for the front seats. All seats are available with optional headrests and optional vertical adjustment may be added to the front seats.

A cabin interior includes a pilot storm window, two sun visors, ash trays, two map pockets, and pockets on the backs of each front seat.

Shoulder harnesses with inertia reels are provided for each front seat occupant and, depending on the model, are provided as standard or optional equipment for the occupants of the rear seats. A check of the inertia reel mechanism can be made by pulling sharply on the strap and checking that the reel will lock in place under sudden stress. This locking feature prevents the strap from extending, and holds the occupant in place. Under normal movement the strap will extend and retract as required. On earlier aircraft provided with a single strap adjustable shoulder harness located above the side window for each front seat, the shoulder strap is routed over the shoulder adjacent to the window and attached to the lap belt in the general area of the occupant's hip. Adjust this fixed strap so that all controls are accessible while maintaining adequate restraint for the occupant. Optional shoulder straps are available for the rear occupants. Shoulder harnesses should be routinely worn during takeoff, landing, and whenever an inflight emergency situation occurs.

7.27 BAGGAGE AREA

A 24 cubic foot baggage area, located behind the rear seats, is accessible either from the cabin or through an outside baggage door on the right side of the aircraft. Maximum capacity is 200 pounds. Tie-down straps are provided and should be used at all times.

NOTE

It is the pilot's responsibility to be sure when the baggage is loaded that the aircraft C.G. falls within the allowable C.G. Range (refer to Section 6 - Weight and Balance).

7.29 STALL WARNING

An approaching stall is indicated by a stall warning horn which is activated between five and ten knots above stall speed. Mild airframe buffeting and gentle pitching may also precede the stall. Stall speeds are shown on graphs in the Performance Section. The stall warning horn emits a continuous sound and is activated by a lift detector installed on the leading edge of the left wing. During preflight, the stall warning system should be checked by turning the master switch ON, lifting the detector and checking to determine if the horn is actuated.

7.31 FINISH

All exterior surfaces are primed with etching primer and finished with acrylic lacquer.

An optional polyurethane finish is available.

7.33 AIR CONDITIONING*

The air conditioning system is a recirculating air system. The major items include: evaporator, condenser, compressor, blower, switches and temperature controls.

The evaporator is located behind the left rear side of the baggage compartment. This cools the air that is used for air conditioning.

The condenser is mounted on a retractable scoop located on the bottom of the fuselage and to the rear of the baggage compartment area. The scoop extends when the air conditioner is ON and retracts to a flush position when the system is OFF.

The compressor is mounted on the forward right underside of the engine. It has an electric clutch which automatically engages or disengages the compressor to the belt drive system of the compressor.

An electrical blower is mounted on the aft side of the rear cabin panel. Air from the baggage area is drawn through the evaporator by the blower and distributed through an overhead duct to individual outlets located adjacent to each occupant.

The switches and temperature control are located on the lower right side of the instrument panel in the climate control center panel. The temperature control regulates the desired temperature of the cabin. Turn the control clockwise for increased cooling, counterclockwise for decreased cooling.

*Optional equipment

Located inboard of the temperature control is the fan speed switch and the air conditioning ON-OFF switch. The fan can be operated independently of the air conditioning. However, it must be on for air conditioner operation. Turning either switch off will disengage the compressor clutch and retract the condenser door. Cooling air should be felt within one minute after the air conditioner is turned on.

NOTE

If the system is not operating in 5 minutes, turn the system OFF until the fault is corrected.

The FAN switch allows operation of the fan with the air conditioner turned OFF to aid cabin air circulation if desired. A LOW or HIGH flow of air can be selected to the air conditioner outlets located in the overhead duct. The outlets can be adjusted or turned off by each occupant to regulate individual cooling effect.

The "DOOR OPEN" indicator light is located to the left of the radio stack in front of the pilot. The light illuminates whenever the condenser door is open and remains on until the door is closed.

A circuit breaker located on the circuit breaker panel protects the air conditioning electrical system.

Whenever the throttle is in the full throttle position, it actuates a micro switch which disengages the compressor and retracts the scoop. This is done to obtain maximum power and maximum rate of climb. The fan continues to operate and the air will remain cool for approximately one minute. When the throttle is retarded approximately 1/4 inch, the clutch will engage and the scoop will extend, again supplying cool, dry air.

7.35 PIPER EXTERNAL POWER*

An optional starting installation known as Piper External Power (PEP) is accessible through a receptacle located on the right side of the fuselage aft of the wing. An external battery can be connected to the socket, thus allowing the operator to crank the engine without having to gain access to the airplane's battery.

*Optional equipment

7.37 EMERGENCY LOCATOR TRANSMITTER*

The Emergency Locator Transmitter (ELT) when installed, is located in the aft portion of the fuselage just below the stabilator leading edge and is accessible through a plate on the right side of the fuselage. This plate is attached with slotted-head nylon screws for ease of removal; these screws may be readily removed with a variety of common items such as a dime, a key, a knife blade, etc. If there are no tools available in an emergency the screw heads may be broken off by any means. The ELT is an emergency locator transmitter which meets the requirements of FAR 91.52.

A battery replacement date is marked on the transmitter to comply with FAA regulations, the battery must be replaced on or before this date. The battery must also be replaced if the transmitter has been used in an emergency situation or if the accumulated test time exceeds one hour, or if the unit has been inadvertently activated for an undetermined time period.

NOTE

If for any reason a test transmission is necessary, the test transmission should be conducted only in the first five minutes of any hour and limited to three audio sweeps. If the tests must be made at any other time, the tests should be coordinated with the nearest FAA tower or flight service station.

NARCO ELT 10 OPERATION

On the ELT unit itself is a three position switch placarded "ON," "OFF" and "ARM." The ARM position sets the ELT so that it will transmit after impact and will continue to transmit until its battery is drained. The ARM position is selected when the ELT is installed in the airplane and it should remain in that position.

*Optional equipment

To use the ELT as a portable unit in an emergency, remove the cover and unlatch the unit from its mounting base. The antenna cable is disconnected by a left quarter-turn of the knurled nut and a pull. A sharp tug on the two small wires will break them loose. Deploy the self-contained antenna by pulling the plastic tab marked ``PULL FULLY TO EXTEND ANTENNA.'' Move the switch to ON to activate the transmitter.

In the event the transmitter is activated by an impact, it can only be turned off by moving the switch on the ELT unit to OFF. Normal operation can then be restored by pressing the small clear plastic reset button located on the top of the front face of the ELT and then moving the switch to ARM.

A pilot's remote switch located on the left side panel is provided to allow the transmitter to be turned on from inside the cabin. The pilot's remote switch is placarded ``ON'' and ``ARMED.'' The switch is normally in the ARMED position. Moving the switch to ON will activate the transmitter. Moving the switch back to the ARMED position will turn off the transmitter only if the impact switch has not been activated.

The ELT should be checked to make certain the unit has not been activated during the ground check. Check by selecting 121.50 MHz on an operating receiver. If there is an oscillating chirping sound, the ELT may have been activated and should be turned off immediately. This requires removal of the access cover and moving the switch to OFF, then press the reset button and return the switch to ARM. Recheck with the receiver to ascertain the transmitter is silent.

NARCO ELT 910 OPERATION

On the ELT unit itself is a three position switch placarded ON, OFF and ARM. The ARM position sets the ELT so that it will transmit after impact and will continue to transmit until its battery is drained. The ARM position is selected when the ELT is installed in the airplane and it should remain in that position.

A pilot's remote switch, placarded ON and ARM, is located on the left side panel to allow the transmitter to be armed or turned on from inside the cabin. The switch is normally in the ARM position. Moving the switch to ON will activate the transmitter. A warning light, located above the remote switch, will blink continuously whenever the ELT is activated.

NOTE

The warning light will not blink if the ELT is activated by an incident that also results in severance of the airplane's power supply lines.

Should the ELT be activated inadvertently it can be reset by either positioning the remote switch to the ON position for two seconds, and then relocating it to the ARM position, or by setting the switch on the ELT to OFF and then back to ARM.

In the event the transmitter is activated by an impact, it can be turned off by moving the ELT switch OFF. Normal operation can then be restored by resetting the switch to ARM. It may also be turned off and reset by positioning the remote switch to the ON position for two seconds, and then to the ARM position.

The transmitter can be activated manually at any time by placing either the remote switch or the ELT switch to the ON position.

Ground Check

The ELT should be checked during postflight to make certain the unit has not been activated. Check by selecting 121.50 MHz on an operating receiver. If a downward sweeping audio tone is heard, the ELT may have been activated. Set the remote switch to ON. If there is no change in the volume of the signal, your airplane is probably transmitting. Setting the remote switch to ARM will automatically reset the ELT and should silence the signal being received on 121.50 MHz.

7.37 EMERGENCY LOCATOR TRANSMITTER (Continued)

ARTEX 110-4 ELT OPERATION

On the ELT unit itself is a two position switch placarded ON and OFF. The OFF position is selected when the transmitter is installed at the factory and the switch should remain in that position whenever the unit is installed in the airplane.

A pilots remote switch, placarded ON and ARM is located on the pilots lower left instrument panel to allow the transmitter to be armed or turned on from inside the cabin. The switch is normally in ARM position. Moving the switch to ON will activate the transmitter. A warning light located above the remote switch will alert you when ever the ELT is activated.

Should the ELT be activated inadvertently it can be reset by either positioning the remote switch to the ON then immediately relocating it to the ARM position, or by setting the switch on the ELT to ON and then back to OFF.

In the event the transmitter is activated by an impact, it can be turned off by moving the ELT switch OFF. Normal operation can then be restored by resetting the switch to ARM. It may also be turned off and reset by positioning the remote switch to the ON and then immediately to the ARM position.

The transmitter can be activated manually at any time by placing either the remote switch or the ELT switch to the ON position.

NOTE:

Three sweeps of the emergency tone and an illuminated warning light indicates a normally functioning unit. The warning light must illuminate during the first 3 second test period. If it does not illuminate, a problem is indicated such as a "G" switch failure.

The ELT should be checked during postflight to make certain the unit has not been activated. Check by selecting 121.50 MHz on an operating receiver. If a downward sweeping audio tone is heard the ELT may have been activated. Set the remote switch to ON. If there is no change in the volume of the signal, your airplane's ELT is probably transmitting. Setting the remote switch back to OFF will automatically reset the ELT and should stop the signal being received on 121.50 MHz.

7.39 CARBURETOR ICE DETECTION SYSTEM *

A carburetor ice detection system is available as an option on this airplane. The system consists of a control box mounted on the instrument panel, a probe sensor mounted in the carburetor and a red warning light to indicate the presence of ice in the carburetor. If ice is present apply full carburetor heat. Refer to Paragraph 3.29, Carburetor Icing, in the emergency procedures. To adjust the system for critical ice detection first turn on the airplanes master switch and then turn on the ice detection unit. Turn the sensitivity knob fully counterclockwise causing the carb ice light to come on. Now rotate the sensitivity knob back (clockwise) until the ice light just goes out. This establishes the critical setting.

WARNING

This instrument is approved as optional equipment only and Flight Operations should not be predicated on its use.

*Optional equipment

TABLE OF CONTENTS

SECTION 8

AIRPLANE HANDLING, SERVICING AND MAINTENANCE

Paragraph No.		Page No.
8.1	General	8-1
8.3	Airplane Inspection Periods	8-2
8.5	Preventive Maintenance	8-3
8.7	Airplane Alterations	8-4
8.9	Ground Handling	8-5
8.11	Engine Air Filter	8-8
8.13	Brake Service	8-8
8.15	Landing Gear Service	8-10
8.17	Propeller Service	8-11
8.19	Oil Requirements	8-12
8.21	Fuel System	8-12
8.23	Tire Inflation	8-14
8.25	Battery Service	8-14
8.27	Cleaning	8-15
8.29	Cold Weather Operation	8-18

SECTION 8

AIRPLANE HANDLING, SERVICING AND MAINTENANCE

8.1 GENERAL

This section provides guidelines relating to the handling, servicing, and maintenance of the Archer II. For complete maintenance instructions, refer to the PA-28-181 Service Manual.

Every owner should stay in close contact with an authorized Piper Service Center or Piper's Customer Service Department to obtain the latest information pertaining to their airplane, and to avail themselves of Piper Aircraft's support systems.

Piper Aircraft Corporation takes a continuing interest in having owners get the most efficient use from their airplane and keeping it in the best mechanical condition. Consequently, Piper Aircraft, from time to time, issues service releases including Service Bulletins, Service Letters and Service Spares Letters, and others relating to the airplane.

Service Bulletins are of special importance and Piper considers compliance mandatory. These are sent directly to the latest FAA-registered owners in the United States (U.S.) and Piper Service Centers worldwide. Depending on the nature of the release, material and labor allowances may apply. This information is provided to all authorized Service Centers.

Service Letters deal with product improvements and servicing techniques pertaining to the airplane. They are sent to Piper Service Centers and, if necessary, to the latest FAA-registered owners in the U.S. Owners should give careful attention to Service Letter information.

Service Spares Letters offer improved parts, kits, and optional equipment which were not available originally, and which may be of interest to the owner.

Piper Aircraft Corporation offers a subscription service for Service Bulletins, Service Letters, and Service Spares Letters. This service is available to interested persons, such as owners, pilots, and mechanics at a nominal fee, and may be obtained through an authorized Piper Service Center or Piper's Customer Services Department.

Maintenance manuals, parts catalogs, and revisions to both, are available from Piper Service Centers or Piper's Customer Services Department.

Any correspondence regarding the airplane should include the airplane model and serial number to ensure proper response.

8.3 AIRPLANE INSPECTION PERIODS

Piper Aircraft Corporation has developed inspection items and required inspection intervals (i.e.: 50, 100, 500, and 1000 hours) for the specific model aircraft. Appropriate forms are contained in the applicable Piper Service/Maintenance Manual, and should be complied with by a properly trained, knowledgeable, and qualified mechanic at a Piper Authorized Service Center or a reputable repair shop. Piper Aircraft Corporation cannot accept responsibility for the continued airworthiness of any aircraft not maintained to these standards, and/or not brought into compliance with applicable Service Bulletins issued by Piper Aircraft Corporation, instructions issued by the engine, propeller, or accessory manufacturers, or Airworthiness Directives issued by the Federal Aviation Administration (FAA).

A programmed inspection, approved by the FAA, is also available to the owner. This involves routine and detailed inspections to allow maximum utilization of the airplane. Maintenance inspection costs are reduced and the maximum standard of continued airworthiness is maintained. Complete details are available from Piper Aircraft Corporation.

In addition, but in conjunction with the above, the FAA requires periodic inspections on all aircraft to keep the Airworthiness Certificate in effect. The owner is responsible for assuring compliance with these inspection requirements and for maintaining proper documentation in logbooks and/or maintenance records.

A spectographic analysis of the engine oil is available from several sources. This inspection, if performed properly, provides a good check of the internal condition of the engine. To be accurate, induction air filters must be cleaned or changed regularly, and oil samples must be taken and sent in at regular intervals.

8.5 PREVENTIVE MAINTENANCE

The holder of a Pilot Certificate issued under FAR Part 61 may perform certain preventive maintenance described in FAR Part 43. This maintenance may be performed only on an aircraft which the pilot owns or operates and which is not used to carry persons or property for hire, except as provided in applicable FAR's. Although such maintenance is allowed by law, each individual should make a self-analysis as to whether he has the ability to perform the work.

All other maintenance required on the airplane should be accomplished by appropriately licensed personnel.

If maintenance is accomplished, an entry must be made in the appropriate logbook. The entry should contain:

(a) The date the work was accomplished.
(b) Description of the work.
(c) Number of hours on the aircraft.
(d) The certificate number of pilot performing the work.
(e) Signature of the individual doing the work.

8.7 AIRPLANE ALTERATIONS

If the owner desires to have his aircraft modified, he must obtain FAA approval for the alteration. Major alterations accomplished in accordance with Advisory Circular 43.13-2, when performed by an A & P mechanic, may be approved by the local FAA office. Major alterations to the basic airframe or systems not covered by AC 43.13-2 require a Supplemental Type Certificate.

The owner or pilot is required to ascertain that the following Aircraft Papers are in order and in the aircraft.

(a) To be displayed in the aircraft at all times:
- (1) Aircraft Airworthiness Certificate Form FAA-8100-2.
- (2) Aircraft Registration Certificate Form FAA-8050-3.
- (3) Aircraft Radio Station License if transmitters are installed.

(b) To be carried in the aircraft at all times:
- (1) Pilot's Operating Handbook.
- (2) Weight and Balance data plus a copy of the latest Repair and Alteration Form FAA-337, if applicable.
- (3) Aircraft equipment list.

Although the aircraft and engine logbooks are not required to be in the aircraft, they should be made available upon request. Logbooks should be complete and up to date. Good records will reduce maintenance cost by giving the mechanic information about what has or has not been accomplished.

8.9 GROUND HANDLING

(a) Towing

The airplane may be moved on the ground by the use of the nose wheel steering bar that is stowed below the forward ledge of the baggage compartment or by power equipment that will not damage or excessively strain the nose gear steering assembly. Towing lugs are incorporated as part of the nose gear fork.

CAUTION

When towing with power equipment, do not turn the nose gear beyond its steering radius in either direction, as this will result in damage to the nose gear and steering mechanism.

CAUTION

Do not tow the airplane when the controls are secured.

In the event towing lines are necessary, ropes should be attached to both main gear struts as high up on the tubes as possible. Lines should be long enough to clear the nose and/or tail by not less than fifteen feet, and a qualified person should ride in the pilot's seat to maintain control by use of the brakes.

(b) Taxiing

Before attempting to taxi the airplane, ground personnel should be instructed and approved by a qualified person authorized by the owner. Engine starting and shut-down procedures as well as taxi techniques should be covered. When it is ascertained that the propeller back blast and taxi areas are clear, power should be applied to start the taxi roll, and the following checks should be performed:

(1) Taxi a few feet forward and apply the brakes to determine their effectiveness.
(2) While taxiing, make slight turns to ascertain the effectiveness of the steering.
(3) Observe wing clearance when taxiing near buildings or other stationary objects. If possible, station an observer outside the airplane.
(4) When taxiing over uneven ground, avoid holes and ruts.
(5) Do not operate the engine at high RPM when running up or taxiing over ground containing loose stones, gravel, or any loose material that may cause damage to the propeller blades.

(c) Parking

When parking the airplane, be sure that it is sufficiently protected from adverse weather conditions and that it presents no danger to other aircraft. When parking the airplane for any length of time or overnight, it is suggested that it be moored securely.

(1) To park the airplane, head it into the wind if possible.
(2) Set the parking brake by pulling back on the brake lever and depressing the knob on the handle. To release the parking brake, pull back on the handle until the catch disengages; then allow the handle to swing forward.

CAUTION

Care should be taken when setting brakes that are overheated or during cold weather when accumulated moisture may freeze a brake.

(3) Aileron and stabilator controls should be secured with the front seat belt and chocks used to properly block the wheels.

(d) Mooring

The airplane should be moored for immovability, security and protection. The following procedures should be used for the proper mooring of the airplane:

(1) Head the airplane into the wind if possible.
(2) Retract the flaps.
(3) Immobilize the ailerons and stabilator by looping the seat belt through the control wheel and pulling it snug.
(4) Block the wheels.
(5) Secure tie-down ropes to the wing tie-down rings and to the tail skid at approximately 45 degree angles to the ground. When using rope of non-synthetic material, leave sufficient slack to avoid damage to the airplane should the ropes contract.

CAUTION

Use bowline knots, square knots or locked slip knots. Do not use plain slip knots.

NOTE

Additional preparations for high winds include using tie-down ropes from the landing gear forks and securing the rudder.

(6) Install a pitot head cover if available. Be sure to remove the pitot head cover before flight.
(7) Cabin and baggage doors should be locked when the airplane is unattended.

8.11 ENGINE AIR FILTER

(a) Removing Engine Air Filter

(1) Remove the lower cowl.
(2) Remove the wing nuts securing the filter. Remove the filter.

(b) Cleaning Engine Air Filter

The induction air filter must be cleaned at least once every 50 hours, and more often, even daily, when operating in dusty conditions. Extra filters are inexpensive, and a spare should be kept on hand for use as a rapid replacement.

To clean the filter:
(1) Tap the filter gently to remove dirt particles, being careful not to damage the filter. DO NOT wash the filter in any liquid. DO NOT attempt to blow out dirt with compressed air.
(2) If the filter is excessively dirty or shows any damage, replace it immediately.
(3) Wipe the filter housing with a clean cloth and install the filter. The usable life of the filter should be restricted to one year or 500 hours, whichever comes first.

(c) Installation Of Engine Air Filter

After cleaning or when replacing the filter, install the filter in the reverse order of removal.

8.13 BRAKE SERVICE

The brake system is filled with MIL-H-5606 (petroleum base) hydraulic brake fluid. The fluid level should be checked periodically or at every 50-hour inspection and replenished when necessary. The brake reservoir is located on the fire wall in the engine compartment. If the entire system must be refilled, fill with fluid under pressure from the brake end of the system. This will eliminate air from the system.

No adjustment of the brake clearances is necessary. If after extended service brake blocks become excessively worn, they should be replaced with new segments.

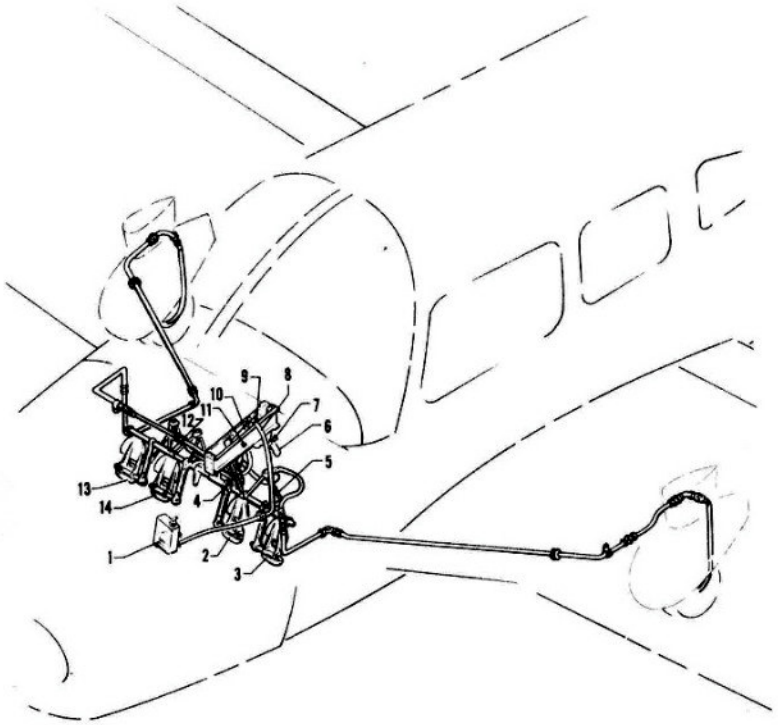

1. BRAKE RESERVOIR
2. RIGHT BRAKE AND RUDDER PEDAL
3. LEFT BRAKE AND RUDDER PEDAL
4. RIGHT BRAKE CYLINDER
5. LEFT BRAKE CYLINDER
6. BRAKE HANDLE
7. HANDLE LOCK BUTTON
8. LINE, INLET
9. CLEVIS PIN
10. MASTER CYLINDER ASSEMBLY
11. BOLT ASSEMBLY
12. TORQUE TUBE
13. COPILOT'S RIGHT BRAKE AND RUDDER PEDAL
14. COPILOT'S LEFT BRAKE AND RUDDER PEDAL

BRAKE SYSTEM
Figure 8-1

8.15 LANDING GEAR SERVICE

The three landing gears use Cleveland Aircraft Products 6.00 x 6, four-ply rating, type III tires and tubes. (Refer to paragraph 8.23.)

Wheels are removed by taking off the hub cap, cotter pin, axle nut, and the two bolts holding the brake segment in place. Mark tire and wheel for reinstallation; then dismount by deflating the tire, removing the three through-bolts from the wheel and separating the wheel halves.

Landing gear oleos on the Archer II should be serviced according to the instructions on the units. The main oleos should be extended under normal static load until 4.50 ± .25 inches of oleo piston tube is exposed, and the nose gear should show 3.25 ± .25 inches. Should the strut exposure be below that required, it should be determined whether air or oil is required by first raising the airplane on jacks. Depress the valve core to allow air to escape from the strut housing chamber. Remove the filler plug and slowly raise the strut to full compression. If the strut has sufficient fluid, it will be visible up to the bottom of the filler plug hole and will then require only proper inflation.

Should fluid be below the bottom of the filler plug hole, oil should be added. Replace the plug with valve core removed; attach a clear plastic hose to the valve stem of the filler plug and submerge the other end in a container of hydraulic fluid. Fully compress and extend the strut several times, thus drawing fluid from the container and expelling air from the strut chamber. To allow fluid to enter the bottom chamber of the main gear strut housing, the torque link assembly must be disconnected to let the strut be extended a minimum of 10 inches (the nose gear torque links need not be disconnected). Do not allow the strut to extend more than 12 inches. When air bubbles cease to flow through the hose, compress the strut fully and again check fluid level. Reinstall the valve core and filler plug, and the main gear torque links, if disconnected.

With fluid in the strut housing at the correct level, attach a strut pump to the air valve and with the airplane on the ground, inflate the oleo strut to the correct height.

In jacking the aircraft for landing gear or other service, two hydraulic jacks and a tail stand should be used. At least 250 pounds of ballast should be placed on the base of the tail stand before the airplane is jacked up. The hydraulic jacks should be placed under the jack points on the bottom of the wing and the airplane jacked up until the tail skid is at the right height to attach the tail stand. After the tail stand is attached and the ballast added, jacking may be continued until the airplane is at the height desired.

The steering arms from the rudder pedals to the nose wheel are adjusted at the nose wheel by turning the threaded rod end bearings in or out. Adjustment is normally accomplished at the forward end of the rods and should be done in such a way that the nose wheel is in line with the fore and aft axis of the plane when the rudder pedals and rudder are centered. Alignment of the nose wheel can be checked by pushing the airplane back and forth with the rudder centered to determine that the plane follows a perfectly straight line. The turning arc of the nose wheel is 30.0° + 2° in either direction and is limited by stops on the bottom of the forging.

The rudder pedal arm stops should be carefully adjusted so that the pedal arms contact the stops just after the rudder hits its stops. This guarantees that the rudder will be allowed to move through its full travel.

8.17 PROPELLER SERVICE

The spinner and backing plate should be frequently cleaned and inspected for cracks. Before each flight the propeller should be inspected for nicks, scratches, and corrosion. If found, they should be repaired as soon as possible by a rated mechanic, since a nick or scratch causes an area of increased stress which can lead to serious cracks or the loss of a propeller tip. The back face of the blades should be painted when necessary with flat black paint to retard glare. To prevent corrosion, the surface should be cleaned and waxed periodically.

8.19 OIL REQUIREMENTS

The oil capacity of the engine is 8 quarts and the minimum safe quantity is 2 quarts. It is recommended that the oil be drained and renewed, and the screen cleaned, every 25 hours. However, if the full flow (cartridge type) oil filter is used, the oil and filter should be drained and renewed every 50 hours of operation. The interval between oil and oil filter change is not to exceed four (4) months. The following grades are recommended for the specified temperatures:

Average Ambient Air Temperature	MIL-L-6082B Mineral SAE Grade	MIL-L-22851 Ashless Dispersant SAE Grades
All Temperatures	--	15W-50 or 20W-50
Above 80°F	60	60
Above 60°F	50	40 or 50
30°F to 90°F	40	40
0°F to 70°F	30	30, 40 or 20W-40
Below 10°F	20	30 or 20W-30

When operating temperatures overlap indicated ranges, use the lighter grade oil.

NOTE

Refer to the latest issue of Lycoming Service Instruction 1014 (Lubricating Oil Recommendations) for further information.

8.21 FUEL SYSTEM

(a) Servicing Fuel System

At every 50 hour inspection, the fuel screens in the strainer, in the electric fuel pump, and at the carburetor inlet must be cleaned.

(b) Fuel Requirements (AVGAS ONLY)

The minimum aviation grade fuel for the PA-28-181 is 100. Since the use of lower grades can cause serious engine damage in a short period of time, the engine warranty is invalidated by the use of lower octanes.

Whenever 100 or 100LL grade fuel is not available, commercial grade 100/130 should be used. (See Fuel Grade Comparison Chart.) Refer to the latest issue of Lycoming Service Instruction No. 1070 for additional information.

A summary of the current grades as well as the previous fuel designations is shown in the following chart:

FUEL GRADE COMPARISON CHART

Previous Commercial Fuel Grades (ASTM-D910)			Current Commercial Fuel Grades (ASTM-D910-75)			Current Military Fuel Grades (MIL-G-5572F)		
Grade	Color	Max. TEL ml/U.S. gal	Grade	Color	Max. TEL ml/U.S. gal	Grade	Color	Max. TEL ml/U.S. gal
80/87	red	0.5	80	red	0.5	80/87	red	0.5
91/96	blue	2.0	*100LL	blue	2.0	none	none	none
100/130	green	3.0	100	green	**3.0	100/130	blue	2.0
115/145	purple	4.6	none	none	none	115/145	purple	4.6

* -Grade 100LL fuel in some overseas countries is colored green and designated as "100L".
** -Commercial fuel grade 100 and grade 100/130 having TEL content of up to 4 ml/U.S. gallons are approved for use in all engines certificated for use with grade 100/130 fuel.

The operation of the aircraft is approved with an anti-icing additive in the fuel. When an anti-icing additive is used it must meet the specification MIL-l-27686, must be uniformly blended with the fuel while refueling, must not exceed .15% by volume of the refueled quantity, and to ensure its effectiveness should be blended at not less than .10% by volume. One and one half liquid ozs. per ten gallon of fuel would fall within this range. A blender supplied by the additive manufacturer should be used. Except for the information contained in this section, the manufacturer's mixing or blending instructions should be carefully followed.

CAUTION

Assure that the additive is directed into the flowing fuel stream. The additive flow should start after and stop before the fuel flow. Do not permit the concentrated additive to come in contact with the aircraft painted surfaces or the interior surfaces of the fuel tanks.

CAUTIONS

Some fuels have anti-icing additives pre-blended in the fuel at the refinery, so no further blending should be performed.

Fuel additive can not be used as a substitute for preflight draining of the the fuel system drains.

(c) Filling Fuel Tanks

Observe all required precautions for handling gasoline. Fuel is stored in two twenty-five gallon (24 gal. usable) tanks.

There is approximately 17 gallons in the fuel tank when fuel level is even with bottom of filler neck indicator.

(d) Draining Fuel Strainer, Sumps and Lines

The fuel system sumps and strainer should be drained daily prior to the first flight and after refueling to avoid the accumulation of contaminants such as water or sediment. Each fuel tank is equipped with an individual quick drain located at the lower inboard rear corner of the tank. The fuel strainer is equipped with a quick drain located on the front lower corner of the fire wall. Each of the fuel tank sumps should be drained first. Then the fuel strainer should be drained twice, once with the fuel selector valve on each tank. Each time fuel is drained, sufficient fuel should be allowed to flow to ensure removal of contaminants. This fuel should be collected in a suitable container, examined for contaminants, and then discarded.

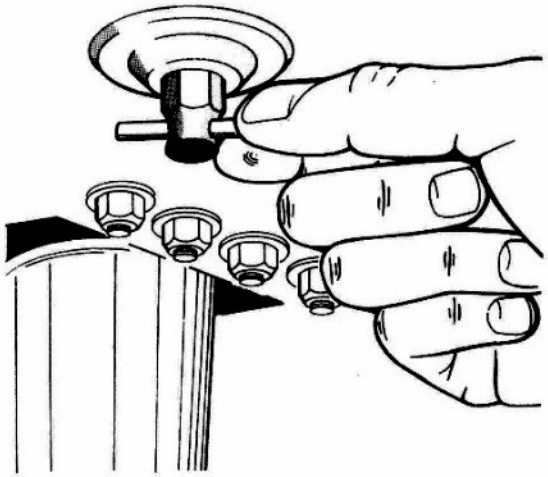

FUEL DRAIN
Figure 8-3

CAUTION

When draining any amount of fuel, care should be taken to ensure that no fire hazard exists before starting the the engine

Each quick drain should be checked after closing it to make sure it has closed completely and is not leaking.

(e) Draining Fuel System

The bulk of the fuel may be drained from the system by opening the valve at the inboard end of each fuel tank. Push up on the arms of the drain valve and turn counterclockwise to hold the drain open. The remaining fuel in the system may be drained through the filter bowl. Any individual tank may be drained by closing the selector valve and then draining the desired tank.

8.23 TIRE INFLATION

For maximum service from the tires, keep them inflated to the proper pressures - 18 psi for the nose gear and 24 psi for the main gear. All wheels and tires are balanced before original installation, and the relationship of tire, tube and wheel should be maintained upon reinstallation. Unbalanced wheels can cause extreme vibration in the landing gear; therefore, in the installation of new components, it may be necessary to rebalance the wheels with the tires mounted. When checking tire pressure, examine the tires for wear, cuts, bruises, and slippage.

8.25 BATTERY SERVICE

Access to the 12-volt battery is through an access panel at the right rear side of the baggage compartment. The battery box has a plastic tube which is normally closed off with a cap and which should be opened occasionally to drain off any accumulation of liquid. The battery should be checked for proper fluid level. DO NOT fill the battery above the baffle plates. DO NOT fill the battery with acid - use water only. A hydrometer check will determine the percent of charge in the battery.

If the battery is not up to charge, recharge starting at a 4 amp rate and finishing with a 2 amp rate. Quick charges are not recommended.

8.27 CLEANING

(a) Cleaning Engine Compartment

Before cleaning the engine compartment, place a strip of tape on the magneto vents to prevent any solvent from entering these units.

(1) Place a large pan under the engine to catch waste.

(2) With the engine cowling removed, spray or brush the engine with solvent or a mixture of solvent and degreaser. In order to remove especially heavy dirt and grease deposits, it may be necessary to brush areas that were sprayed.

CAUTION

Do not spray solvent into the alternator, vacuum pump, starter, or air intakes.

(3) Allow the solvent to remain on the engine from five to ten minutes. Then rinse the engine clean with additional solvent and allow it to dry.

CAUTION

Do not operate the engine until excess solvent has evaporated or otherwise been removed.

(4) Remove the protective tape from the magnetos.

(5) Lubricate the controls, bearing surfaces, etc., in accordance with the Lubrication Chart.

(b) Cleaning Landing Gear

Before cleaning the landing gear, place a plastic cover or similar material over the wheel and brake assembly.

(1) Place a pan under the gear to catch waste.
(2) Spray or brush the gear area with solvent or a mixture of solvent and degreaser, as desired. Where heavy grease and dirt deposits have collected, it may be necessary to brush areas that were sprayed, in order to clean them.
(3) Allow the solvent to remain on the gear from five to ten minutes. Then rinse the gear with additional solvent and allow to dry.
(4) Remove the cover from the wheel and remove the catch pan.
(5) Lubricate the gear in accordance with the Lubrication Chart.

(c) Cleaning Exterior Surfaces

The airplane should be washed with a mild soap and water. Harsh abrasives or alkaline soaps or detergents could make scratches on painted or plastic surfaces or could cause corrosion of metal. Cover areas where cleaning solution could cause damage. To wash the airplane, use the following procedure:

(1) Flush away loose dirt with water.
(2) Apply cleaning solution with a soft cloth, a sponge or soft bristle brush.
(3) To remove exhaust stains, allow the solution to remain on the surface longer.
(4) To remove stubborn oil and grease, use a cloth dampened with naphtha.
(5) Rinse all surfaces thoroughly.
(6) Any good automotive wax may be used to preserve painted surfaces. Soft cleaning cloths or a chamois should be used to prevent scratches when cleaning or polishing. A heavier coating of wax on the leading surfaces will reduce the abrasion problems in these areas.

(d) Cleaning Windshield and Windows

(1) Remove dirt, mud and other loose particles from exterior surfaces with clean water.
(2) Wash with mild soap and warm water or with aircraft plastic cleaner. Use a soft cloth or sponge in a straight back and forth motion. Do not rub harshly.
(3) Remove oil and grease with a cloth moistened with kerosene.

CAUTION

Do not use gasoline, alcohol, benzene, carbon tetrachloride, thinner, acetone, or window cleaning sprays.

(4) After cleaning plastic surfaces, apply a thin coat of hard polishing wax. Rub lightly with a soft cloth. Do not use a circular motion.
(5) A severe scratch or mar in plastic can be removed by rubbing out the scratch with jeweler's rouge. Smooth both sides and apply wax.

(e) Cleaning Headliner, Side Panels and Seats

(1) Clean headliner, side panels, and seats with a stiff bristle brush, and vacuum where necessary.
(2) Soiled upholstery, except leather, may be cleaned with a good upholstery cleaner suitable for the material. Carefully follow the manufacturer's instructions. Avoid soaking or harsh rubbing.

CAUTION

Solvent cleaners require adequate ventilation.

(3) Leather should be cleaned with saddle soap or a mild hand soap and water.

(f) Cleaning Carpets

To clean carpets, first remove loose dirt with a whisk broom or vacuum. For soiled spots and stubborn stains use a noninflammable dry cleaning fluid. Floor carpets may be removed and cleaned like any household carpet.

8.29 COLD WEATHER OPERATION

For cold weather operation a winterization plate is installed on the inlet opening of the oil cooler duct on the right rear engine baffle. This plate should be installed whenever the ambient temperature reaches 50° F or less. The plate should be removed and stored in the cockpit when the ambient temperature exceeds 50° F.

It is recommended that an optional Engine Breather Tube Winterization Kit be installed for cold weather operation. This kit is available through your Piper Dealer/Distributor.

TABLE OF CONTENTS

SECTION 9

SUPPLEMENTS

Paragraph/Supplement No.		Page No.
9.1	General	9-1
1	Air Conditioning Installation	9-3
2	AutoFlite II Autopilot Installation	9-7
3	AutoControl IIIB Autopilot Installation	9-9
4	Piper Electric Pitch Trim	9-13
5	Century 21 Autopilot Installation	9-15
6	Piper Control Wheel Clock Installation	9-19
7	King KAP 100 Series Flight Control System	9-21
8	King KAP 150 Series Flight Control System	9-41
9	KNS 80 Navigation System	9-67
10	Auxiliary Vacuum System	9-71
11	GARMIN 155 XL	

SECTION 9

SUPPLEMENTS

9.1 GENERAL

This section provides information in the form of Supplements which are necessary for efficient operation of the airplane when equipped with one or more of the various optional systems and equipment not provided with the standard airplane.

All of the Supplements provided by this section are "FAA Approved" and consecutively numbered as a permanent part of this Handbook. The information contained in each Supplement applies only when the related equipment is installed in the airplane.

THIS PAGE INTENTIONALLY LEFT BLANK

SUPPLEMENT 1

AIR CONDITIONING INSTALLATION

SECTION 1 - GENERAL

This supplement supplies information necessary for the efficient operation of the airplane when the optional air conditioning system is installed. The information contained within this supplement is to be used "as described" in conjunction with the complete handbook.

This supplement has been "FAA Approved" as a permanent part of this handbook and must remain in this handbook at all times when the optional air conditioning system is installed.

SECTION 2 - LIMITATIONS

(a) To insure maximum climb performance the air conditioner must be turned OFF manually prior to takeoff to disengage the compressor and retract the condenser door. Also the air conditioner must be turned OFF manually before the landing approach in preparation for a possible go-around.

(b) Placards
In full view of the pilot, in the area of the air conditioner controls when the air conditioner is installed:

"WARNING - AIR CONDITIONER MUST
BE OFF TO INSURE NORMAL TAKEOFF
CLIMB PERFORMANCE."

In full view of the pilot, to the right of the engine gauges (condenser door light):

"AIR COND DOOR
OPEN"

SECTION 3 - EMERGENCY PROCEDURES

No changes to the basic Emergency Procedures provided by Section 3 of this Pilot's Operating Handbook are necessary for this supplement.

SECTION 4 - NORMAL PROCEDURES

Prior to takeoff, the air conditioner should be checked for proper operation as follows:

(a) Check aircraft master switch ON.

(b) Turn the air conditioner control switch to ON and the fan switch to one of the operating positions - the "AIR COND DOOR OPEN" warning light will turn on, thereby indicating proper air conditioner condenser door actuation.

(c) Turn the air conditioner control switch to OFF - the "AIR COND DOOR OPEN" warning light will go out, thereby indicating the air conditioner condenser door is in the up position.

(d) If the "AIR COND DOOR OPEN" light does not respond as specified above, an air conditioner system or indicator bulb malfunction is indicated and further investigation should be conducted prior to flight.

The above operational check may be performed during flight if an in flight failure is suspected.

The condenser door light is located to the right of the engine instrument cluster in front of the pilot. The door light illuminates when the door is open and is off when the door is closed.

SECTION 5 - PERFORMANCE

Operation of the air conditioner will cause slight decreases in cruise speed and range. Power from the engine is required to run the compressor, and the condenser door, when extended, causes a slight increase in drag. When the air conditioner is turned off there is normally no measurable difference in climb, cruise or range performance of the airplane.

NOTE

To insure maximum climb performance the air conditioner must be turned off manually before takeoff to disengage the compressor and retract the condenser door. Also the air conditioner must be turned off manually before the landing approach in preparation for a possible go-around.

Although the cruise speed and range are only slightly affected by the air conditioner operation, these changes should be considered in preflight planning. To be conservative, the following figures assume that the compressor is operating continuously while the airplane is airborne. This will be the case only in extremely hot weather.

(a) The decrease in true airspeed is approximately 4 KTS at all power settings.

(b) The decrease in range may be as much as 32 nautical miles for the 48 gallon capacity.

The climb performance is not compromised measurably with the air conditioner operating since the compressor is declutched and the condenser door is retracted, both automatically, when a full throttle position is selected. When the full throttle position is not used or in the event of a malfunction which would cause the compressor to operate and the condenser door to be extended, a decrease in rate of climb of as much as 100 fpm can be expected. Should a malfunction occur which prevents condenser door retraction when the compressor is turned off, a decrease in rate of climb of as much as 50 fpm can be expected.

SECTION 6 - WEIGHT AND BALANCE

Factory installed optional equipment is included in the licensed weight and balance data in Section 6 of the Pilot's Operating Handbook.

SECTION 7 - DESCRIPTION AND OPERATION

No change.

THIS PAGE INTENTIONALLY LEFT BLANK

SUPPLEMENT 2

AUTOFLITE II AUTOPILOT INSTALLATION

SECTION 1 - GENERAL

This supplement supplies information necessary for the operation of the airplane when the optional AutoFlite II Autopilot is installed. The information contained within this supplement is to be used "as described" in conjunction with the complete handbook.

This supplement has been "FAA Approved" as a permanent part of this handbook and must remain in this handbook at all times when the optional AutoFlite II Autopilot is installed.

SECTION 2 - LIMITATIONS

(a) Autopilot use prohibited above 149 KIAS.
(b) Autopilot OFF during takeoff and landing.

SECTION 3 - EMERGENCY PROCEDURES

(a) In case of malfunction DEPRESS and hold Disconnect switch on pilot's control wheel.
(b) Rocker switch on instrument panel OFF.
(c) Unit may be overpowered manually.
(d) In climb, cruise or descent configuration a malfunction with a 3 second delay in recovery initiation may result in 45° bank and 180′ altitude loss. Maximum altitude loss measured at 149 KIAS in a descent.
(e) In approach configuration a malfunction with a 1 second delay in recovery initiation results in 18° bank and 10′ altitude loss.

SECTION 4 - NORMAL PROCEDURES

(a) Engagement
  (1) Rocker Switch on instrument panel - ON.
  (2) Disconnect Switch on left hand side of pilot's control wheel - RELEASED.

(b) Disengagement
  (1) Depress Disconnect Switch on pilot's control wheel (or)
  (2) Rocker Switch on instrument panel - OFF.

(c) Heading Changes
  (1) Depress Disconnect Switch, make Heading Change, release Disconnect Switch.
  (2) Move Trim Knob on instrument for Drift Correction from a constant heading.
  (3) Move Turn Command Knob on instrument for right or left banked turns.

(d) OMNI Tracker
  (1) Center Turn Command Knob and push IN to engage Tracker.
  (2) Trim Knob - push IN for high sensitivity.

SECTION 5 - PERFORMANCE

No changes to the basic performance provided by Section 5 of this Pilot's Operating Handbook are necessary for this supplement.

SUPPLEMENT 3

AUTOCONTROL IIIB AUTOPILOT INSTALLATION

SECTION 1 - GENERAL

This supplement supplies information necessary for the operation of the airplane when the optional Piper AutoControl IIIB Autopilot is installed. The information contained within this supplement is to be used as described in conjunction with the complete handbook.

This supplement has been FAA Approved as a permanent part of this handbook and must remain in this handbook at all times when the optional Piper AutoControl IIIB Autopilot is installed.

SECTION 2 - LIMITATIONS

(a) Autopilot use prohibited above 149 KIAS.
(b) Autopilot OFF during takeoff and landing.

SECTION 3 - EMERGENCY OPERATION

(a) In an emergency the AutoControl IIIB can be disconnect by pushing the roll ON-OFF Rocker Switch OFF.
(b) The autopilot can be overpowered at either control wheel.
(c) An autopilot runaway, with a 3 second delay in the initiation of recovery while operating in a climb, cruise or descending flight, could result in a 45° bank and 180′ altitude loss. Maximum altitude loss measured at 149 KTS in a descent.
(d) An autopilot runaway, with a 1 second delay in the initiation of recovery, during an approach operation, coupled or uncoupled, could result in a 18° bank and 10′ altitude loss.

SECTION 4 - NORMAL PROCEDURES

PREFLIGHT

(a) AUTOPILOT

(1) Place Radio Coupler in "HDG" Mode (if installed) and place the AP ON-OFF switch to the ON position to engage roll section. Rotate roll command knob left and right and observe that control wheel describes a corresponding left and right turn, then center knob.

(2) Set correct compass heading on D.G. and turn HDG bug to aircraft heading. Engage "HDG" mode rocker switch and rotate HDG bug right and left. Aircraft control wheel should turn same direction as bug. Grasp control wheel and manually override servo, both directions.

(b) RADIO COUPLER (OPTIONAL)

(1) Tune and identify VOR or VOT station. Position Radio Coupler to OMNI Mode. Engage Autopilot ON and HDG switches. Set HDG bug to aircraft heading and rotate O.B.S. to cause OMNI indicator Needle to swing left and right slowly. Observe that control wheel rotates in direction of needle movement.

(2) Disengage AP ON-OFF switch. Reset Radio Coupler control to HDG.

IN-FLIGHT

(a) Trim airplane (ball centered).

(b) Check air pressure vacuum to ascertain that the directional gyro and attitude gyro are receiving sufficient air.

(c) Roll Section.

(1) To engage, center ROLL knob, push AP ON-OFF switch to ON position. To turn, rotate console ROLL knob in desired direction. (Maximum angle of bank should not exceed 30.)

(2) For heading mode, set directional gyro with magnetic compass. Push directional gyro HDG knob in, rotate bug to aircraft heading. Push console heading rocker (HDG) switch to ON position. To select a new aircraft heading, push D.G. heading knob IN and rotate, in desired direction of turn, to the desired heading.

(d) Radio Coupling — VOR/ILS with Standard directional gyro. (Optional)

(1) For VOR Intercepts and Tracking:
Select the desired VOR course and set the HDG bug to the same heading. Select OMNI mode on the coupler and HDG Mode on the autopilot console.

(2) For ILS Front Course Intercepts and Tracking:
Tune the localizer frequency and place the HDG bug on the inbound, front course heading. Select LOC-NORM mode on the coupler and HDG mode on the autopilot console.

(3) For LOC Back Course Intercepts and Tracking:
Tune the localizer frequency and place the HDG bug on the inbound course heading to the airport. Select LOC-REV mode with coupler and HDG mode on the autopilot console.

SECTION 5 - PERFORMANCE

No changes to the basic performance provided by Section 5 of this Pilot's Operating Handbook are necessary for this supplement.

THIS PAGE INTENTIONALLY LEFT BLANK

SUPPLEMENT 4

PIPER ELECTRIC PITCH TRIM

SECTION 1 - GENERAL

This supplement supplies information necessary for the operation of the airplane when the optional Piper Electric Pitch Trim is installed. The information contained within this supplement is to be used "as described" in conjunction with the complete handbook.

This supplement has been "FAA Approved" as a permanent part of this handbook and must remain in this handbook at all times when the optional Piper Electric Pitch Trim is installed.

SECTION 2 - LIMITATIONS

No changes of the basic limitations provided by Section 2 of this Pilot's Operating Handbook are necessary for this supplement.

SECTION 3 - EMERGENCY PROCEDURES

(a) In case of malfunction, ACTIVATE disconnect switch located above the ignition switch, to OFF position.
(b) In case of malfunction, overpower the electric trim at either control wheel.
(c) Maximum altitude change with a 4 second delay in recovery initiation is 800 feet and occurs in the descent configuration. Maximum altitude change in the approach configuration with a 4 second recovery delay is 100 feet.

SECTION 4 - NORMAL PROCEDURES

The electric trim system may be turned ON or OFF by a switch located above the ignition switch. The pitch trim may be changed when the electric trim system is turned on either by moving the manual pitch trim control wheel or by operating the trim control switch on the pilot's control yoke. To prevent excessive speed increase in the event of an electric trim runaway malfunction, the system incorporates an automatic disconnect feature which renders the system inoperative above approximately 143 KIAS. The disconnected condition does not affect the manual trim system.

SECTION 5 - PERFORMANCE

No changes to the basic performance provided by Section 5 of this Pilot's Operating Handbook are necessary for this supplement.

SUPPLEMENT 5

CENTURY 21 AUTOPILOT INSTALLATION

SECTION 1 - GENERAL

This supplement supplies information necessary for the operation of the airplane when the optional Century 21 Autopilot is installed in accordance with STC SA3352SW. The information contained within this supplement is to be used in conjunction with the complete handbook.

This supplement has been 'FAA Approved" as a permanent part of this handbook and must remain in this handbook at all times when the optional Century 21 Autopilot is installed.

SECTION 2 - LIMITATIONS

(a) Autopilot operation prohibited above 147 KIAS.
(b) Autopilot OFF during takeoff and landing.

SECTION 3 - EMERGENCY PROCEDURES

(a) AUTOPILOT
In the event of an autopilot malfunction, or anytime the autopilot is not performing as commanded, do not attempt to identify the problem. Regain control of the aircraft by overpowering and immediately disconnecting the autopilot by depressing the AP ON-OFF switch on the programmer OFF.

Do not operate until the system failure has been identified and corrected.

(1) Altitude Loss During Malfunction:
   a. An autopilot malfunction during climb, cruise or descent with a 3 second delay in recovery initiation could result in as much as a 45° of bank and 180' altitude loss. Maximum altitude loss was recorded at 147' KIAS during descent.
   b. An autopilot malfunction during an approach with a 1 second delay in recovery initiation could result in as much as 18° bank and 10' altitude loss. Maximum altitude loss measured in approach configuration, and operating either coupled or uncoupled.

(b) COMPASS SYSTEM
(1) Emergency Operation With Optional NSD 360A (HSI) Slaved and/or Non-Slaved:

NSD 360A
   a. Appearance of HDG Flag:
      1. Check air supply gauge (vac or pressure) for adequate air supply (4 in. Hg. min.)
      2. Check compass circuit breaker.
      3. Observe display for proper operation.
   b. To disable heading card - pull circuit breaker and use magnetic compass for directional data.

NOTE

If heading card is not operational, autopilot should not be used.

   c. With card disabled VOR/Localizer and Glide Slope displays are still functional; use card set to rotate card to aircraft heading for correct picture.
   d. Slaving Failure - (i.e. failure to self correct for gyro drift):
      1. Check gyro slaving switch is set to No. 1 position (if equipped with Slave No. 1 - No. 2 switch) or "Slaved" position when equipped with Slaved and Free Gyro Mode Switch.
      2. Check for HDG Flag.
      3. Check compass circuit breaker.
      4. Reset heading card while observing slaving meter.

NOTE

Dead slaving meter needle or a needle displaced fully one direction indicates a slaving system failure.

      5. Select slaving amplifier No. 2 if equipped.
      6. Reset heading card while checking slaving meter. If proper slaving indication is not obtained, switch to free gyro mode and periodically set card as an unslaved gyro.

NOTE

In the localizer mode, the "TO-FROM" arrows may remain out of view, depending upon the design of the NAV converter used in the installation.

SECTION 4 - NORMAL PROCEDURES

Refer to Edo-Aire Mitchell Century 21 Autopilot Operator's Manual, P/N 68S805, dated 1-79 for Autopilot Description and Normal Operating Procedures.

(a) PREFLIGHT PROCEDURES

NOTE

During system functional check the system must be provided adequate D.C. voltage (12.0 VDC min.) and instrument air (4.2 in. Hg. min.). It is recommended that the engine be operated to provide the necessary power and that the aircraft be positioned in a level attitude, during the functional check.

(b) AUTOPILOT WITH STANDARD D.G.

(1) Engage autopilot.
(2) Control wheel movement should correspond to HDG command input.
(3) Grasp control wheel and override roll servo actuator to assure override capability.
(4) With HDG bug centered select NAV or APPR mode and note control wheel movement toward VOR needle offset.
(5) Select REV mode and note control wheel movement opposite VOR needle offset.
(6) Disengage autopilot.
(7) Check aileron controls through full travel to assure complete autopilot disengagement.

(c) AUTOPILOT WITH COMPASS SYSTEM (NSD 360A)
(For other compass systems, refer to appropriate manufacturer's instructions)

(1) Check slaving switch in slave or slave 1 or 2 position, as appropriate. (Slaving systems with R.M.I. output provide only slave and free gyro positions.)
(2) Rotate card to center slaving meter - check HDG displayed with magnetic compass HDG.
(3) Perform standard VOR receiver check.
(4) Perform Steps (1) - (7) in Section 4 item (b) except in Steps (4) and (5) substitute course arrow for HDG bug when checking control wheel movement in relation to L/R needle. HDG bug is inoperative with NAV, APPR. or REV mode selected.

(d) IN-FLIGHT PROCEDURE

(1) Trim aircraft for existing flight condition (all axes).
(2) Rotate heading bug to desired heading. Engage autopilot.
(3) During maneuvering flight - control aircraft through use of the HDG bug. (HDG mode)
(4) For navigation operations select modes as required by the operation being conducted and in accordance with the mode description provided in the Century 21 Operator's Manual.

SECTION 5 - PERFORMANCE

No changes to the basic performance provided by Section 5 of this Pilot's Operating Handbook are necessary for this supplement.

SUPPLEMENT 6

PIPER CONTROL WHEEL CLOCK INSTALLATION

SECTION 1 - GENERAL

This supplement supplies information necessary for the operation of the airplane when the optional Piper Control Wheel Clock is installed. The information contained within this supplement is to be used in conjunction with the complete handbook.

This supplement has been "FAA Approved" as a permanent part of this handbook and must remain in this handbook at all times when the optional Piper Control Wheel Clock is installed.

SECTION 2 - LIMITATIONS

No changes to the basic limitations provided by Section 2 of this Pilot's Operating Handbook are necessary for this supplement.

SECTION 3 - EMERGENCY PROCEDURES

No changes to the basic Emergency Procedures provided by Section 3 of this Pilot's Operating Handbook are necessary for this supplement.

SECTION 4 - NORMAL PROCEDURES

(a) SETTING

While in the CLOCK mode, the time and the date can be set by the operation of the RST button.

(b) DATE SETTING

Pressing the RST button once will cause the date to appear with the month flashing. Pressing the ST-SP button will advance the month at one per second, or at one per push, until the right month appears.

Pressing the RST button once again will cause the date to flash, and it can be set in a similiar manner.

(c) TIME SETTING

The RST button must now be pressed two times to cause the hours digits to flash. The correct hour can be set in as described above.

Pressing the RST button once again will now cause the minutes digits to flash. The minutes should be set to the next minute to come up at the zero seconds time mark. The RST button is pressed once more to hold the time displayed. At the time mark, the ST-SP button is pressed momentarily to begin the time counting at the exact second.

If the minutes are not advanced when they are flashing in the set mode, pressing the RST button will return the clock to the normal timekeeping mode without altering the minutes timing. This feature is useful when changing time zones, when only the hours are to be changed.

(d) AUTOMATIC DATE ADVANCE

The calendar function will automatically advance the date correctly according to the four year perpetual calendar. One day must be added manually on Feb. 29 on leap year. The date advances correctly at midnight each day.

(e) DISPLAY TEST

Pressing both the RST and ST-SP buttons at the same time will result in a display test function.

SECTION 5 - PERFORMANCE

No changes to the basic performance provided by Section 5 of this Pilot's Operating Handbook are necessary for this supplement.

PILOT'S OPERATING HANDBOOK AND FAA APPROVED AIRPLANE FLIGHT MANUAL

SUPPLEMENT NO. 7 FOR KING KAP 100 SERIES FLIGHT CONTROL SYSTEM

This supplement must be attached to the Pilot's Operating Handbook and FAA Approved Airplane Flight Manual when the King KAP 100 Series Flight Control System is installed in accordance with STC SA1565CE-D. The information contained herein supplements or supersedes the information in the basic Pilot's Operating Handbook and FAA Approved Airplane Flight Manual only in those areas listed herein. For limitations, procedures and performance information not contained in this supplement, consult the basic Pilot's Operating Handbook and FAA Approved Airplane Flight Manual.

FAA APPROVED Ward Evans
WARD EVANS
D.O.A. NO. SO-1
PIPER AIRCRAFT CORPORATION
VERO BEACH, FLORIDA

DATE OF APPROVAL JULY 21, 1982

SECTION 1 - GENERAL

This supplement supplies information necessary for the operation of the airplane when the optional King KAP 100 Series Flight Control System is installed. The Flight Control System must be operated within the limitations herein specified. The information contained within this supplement is to be used in conjunction with the complete handbook.

This supplement has been FAA Approved as a permanent part of this handbook and must remain in this handbook at all times when the optional King KAP 100 Series Flight Control System is installed.

SECTION 2 - LIMITATIONS

The autopilot must be OFF during takeoff and landing.

SECTION 3 - EMERGENCY PROCEDURES

(a) SYSTEM WITH AUTOPILOT ONLY

(1) In case of Autopilot malfunction: (accomplish items a. and b. simultaneously)
   a. Airplane Control Wheel - GRASP FIRMLY and regain aircraft control.
   b. AP ENG Button - PRESS to disengage autopilot.

(b) SYSTEMS WITH AUTOPILOT AND OPTIONAL MANUAL ELECTRIC TRIM

(1) In case of Autopilot malfunction: (accomplish items a. and b. simultaneously)
   a. Airplane Control Wheel - GRASP FIRMLY and regain aircraft control.
   b. AP DISC TRIM INTER Switch - PRESS.

(2) In case of Manual Electric Trim malfunction:
   a. AP DISC TRIM INTER Switch - PRESS and HOLD.
   b. PITCH TRIM Circuit Breaker - PULL.
   c. Aircraft - RETRIM manually.

SECTION 4 - NORMAL PROCEDURES

(a) PREFLIGHT (PERFORM PRIOR TO EACH FLIGHT)

(1) GYROS - Allow 3-4 minutes for gyros to come up to speed.
(2) RADIO POWER / AVIONICS MASTER Switch - ON
(3) PREFLIGHT TEST BUTTON - PRESS momentarily and NOTE:
   a. All annunciator lights on (TRIM annunciator flashing).
   b. After approximately 5 seconds, all annunciator lights off except AP which will flash approximately 12 times and then remain off.

NOTE

If trim warning light stays on then the manual electric trim did not pass preflight test. The pitch trim circuit breaker should be pulled. The autopilot can still be used.

(4) MANUAL ELECTRIC TRIM (if installed) - TEST as follows:
   a. Actuate the left side of the split switch to the fore and aft positions. The trim wheel should not move on its own. Rotate the trim wheel manually against the engaged clutch to check the pilot's overpower capability.
   b. Actuate right side of split switch unit to the fore and aft positions. The trim wheel should not move on its own and normal trim wheel force is required to move it manually.
   c. Press the AP DISC/TRIM INTER switch down and hold. Manual Electric Trim should not operate either nose up or or nose down.
(5) AUTOPILOT - ENGAGE by pressing AP ENG button.
(6) CONTROL WHEEL - MOVE left and right to verify that the autopilot can be overpowered.
(7) AP DISC/TRIM INTER Switch - PRESS. Verify that the autopilot disconnects and all modes are cancelled.
(8) TRIM - SET to take off position.

(b) AUTOPILOT OPERATION

(1) Before takeoff
AP DISC/TRIM INTER Switch - PRESS.

(2) Autopilot Engagement
AP ENG Button - PRESS. Note AP annunciator on. If no other modes are selected the autopilot will operate in the wings level mode.

(3) Heading Changes
a. Manual Heading Changes
1. CWS Button - PRESS and MANEUVER aircraft to the desired heading.
2. CWS Button - RELEASE. Autopilot will maintain aircraft in wings level attitude.

NOTE

Aircraft heading may change in the wings level mode due to an aircraft out of trim condition.

b. Heading Hold
1. Heading Selector Knob - SET BUG to desired heading.
2. HDG Mode Selector Button - PRESS. Note HDG mode annunciator ON. Autopilot will automatically turn the aircraft to the selected heading.

c. Command Turns (Heading Hold Mode ON)
HEADING Selector Knob - MOVE BUG to the desired heading. Autopilot will automatically turn the aircraft to the new selected heading.

(4) NAV Coupling
a. When equipped with HSI.
1. Course Bearing Pointer - SET to desired course.

NOTE

When equipped with NAV 1/NAV 2 switching and NAV 2 is selected, set OBS to the desired course.

2. HEADING SELECTOR KNOB - SET BUG to provide desired intercept angle.

3. NAV Mode Selector Button - PRESS.
If the Course Deviation Bar is greater than 2 to 3 dots: the aircraft will continue in HDG mode (or wings level if HDG not selected) with the NAV annunciator flashing; when the computed capture point is reached the HDG will disengage, the NAV annunciator will illuminate steady and the selected course will be automatically captured and tracked.

If the D-Bar is less than 2 to 3 dots: the HDG mode will disengage upon selecting NAV mode; the NAV annunciator will illuminate steady and the capture/track sequence will automatically begin.

b. When equipped with DG
1. OBS Knob - SELECT desired course.
2. NAV Mode Selector Button - PRESS.
3. Heading Selector Knob - ROTATE BUG to agree with OBS course.

NOTE

When NAV is selected, the lateral operating mode will change from HDG (if selected) to wings level for 5 seconds. A 45° intercept angle will then be automatically established based on the position of the bug.

If the D-Bar is greater than 2 to 3 dots: the autopilot will annunciate HDG mode, (unless HDG not selected) and NAV flashing; when the computed capture point is reached the HDG annunciator will go out, the NAV annunciator will illuminate steady and the selected course will be automatically captured and tracked.

If the D-Bar is less than 2 to 3 dots: the HDG mode will disengage upon selecting NAV mode; the NAV annunciator will illuminate steady and the capture/track sequence will automatically begin.

(5) Approach (APR) Coupling

a. When equipped with HSI

1. Course Bearing Pointer - SET to desired course.

NOTE

When equipped with NAV 1/NAV 2 switching and NAV 2 is selected, set OBS to the desired course.

2. HEADING Selector Knob - SET BUG to provide desired intercept angle.
3. APR Mode Selector Button - PRESS.
   If the Course Deviation Bar is greater than 2 to 3 dots: the aircraft will continue in HDG mode (or wings level if HDG not selected) with the APR annunciator flashing; when the computed capture point is reached the HDG will disengage, the APR annunciator will illuminate steady and the selected course will be automatically captured and tracked.

   If the D-Bar is less than 2 to 3 dots: the HDG mode will disengage upon selecting APR mode; the APR annunciator will illuminate steady and the capture/track sequence will automatically begin.

b. When equipped with DG

1. OBS Knob - SELECT desired approach course.
2. APR Mode Selector Button - PRESS.
3. Heading Selector Knob - ROTATE Bug to agree with OBS course.

NOTE

When APR is selected, the lateral operating mode will change from HDG (if selected) to wings level for 5 seconds. A 45° intercept angle will then be automatically established based on the position of the bug.

If the D-Bar is greater than 2 to 3 dots: the autopilot will annunciate HDG mode (unless HDG not selected) and APR flashing; when the computed capture point is reached the HDG annunciator will go out, the APR annunciator will illuminate steady and the selected course will be automatically captured and tracked.

If the D-Bar is less than 2 to 3 dots: the HDG mode will disengage upon selecting APR mode; the APR annunciator will illuminate steady and the capture/track sequence will automatically begin.

(6) BC Approach Coupling

a. When equipped with HSI

1. Course Bearing Pointer - SET to the ILS front course inbound heading.

NOTE

When equipped with NAV 1/NAV 2 switching and NAV 2 is selected, set OBS to the ILS front course inbound heading.

2. HEADING Selector Knob - SET BUG to provide desired intercept angle.
3. BC Mode Selector Button - PRESS.
   If the Course Deviation Bar is greater than 2 to 3 dots: the aircraft will continue in HDG mode (or wings level if HDG not selected) with BC annunciated steady and APR annunciator flashing; when the computed capture point is reached the HDG will disengage, the BC and APR annunciators will illuminate steady and the selected course will be automatically captured and tracked.

   If the D-Bar is less than 2 to 3 dots: the HDG mode will disengage upon selecting BC mode; the APR BC annunciator will illuminate steady and the capture/track sequence will automatically begin.

b. When equipped with DG
   1. OBS Knob - SELECT the ILS front course inbound heading.
   2. BC Mode Selector Button - PRESS.
   3. Heading Selector Knob - ROTATE Bug to the ILS front course inbound heading.

NOTE

When BC is selected, the lateral operating mode will change from HDG (if selected) to wings level for 5 seconds. A 45° intercept angle will then be established based on the position of the bug.

If the D-Bar is greater than 2 to 3 dots: the autopilot will annunciate HDG (unless HDG not selected) and BC modes with APR flashing; when the computed capture point is reached the HDG annunciator will go out, the BC and APR annunciators will illuminate steady and the selected course will be automatically captured and tracked.

If the D-Bar is less than 2 to 3 dots: the HDG mode will disengage upon selecting BC mode; the BC and APR annunciators will illuminate steady and the capture/track sequence will automatically begin.

(7) Missed Approach
   a. AP DISC/TRIM INTER - PRESS to disengage AP.
   b. MISSED APPROACH - EXECUTE.
   c. AP ENG Button - PRESS (if AP operation is desired). Note AP annunciator ON.

(8) Before Landing
   AP DISC/TRIM INTER - PRESS to disengage AP.

SECTION 5 - PERFORMANCE

No change.

SECTION 6 - WEIGHT AND BALANCE

Factory installed optional equipment is included in the licensed weight and balance data in Section 6 of the Basic Pilot's Operating Handbook.

SECTION 7 - DESCRIPTION AND OPERATION

This manual is provided to acquaint the pilot with the limitations as well as normal and emergency operating procedures of the King KAP 100 Automatic Flight Control System. The limitations presented are pertinent to the operation of the KAP 100 System as installed in the Piper Model PA-28-181 airplane; the Flight Control System must be operated within the limitations herein specified.

The KAP 100 Autopilot is certified in this airplane with roll axis control. The various instruments and the controls for the operation of the KAP 100 Autopilot are described in Figures 7-1 thru 7-11.

The KAP 100 Autopilot has an optional electric pitch trim system. The trim system is designed to withstand any single inflight malfunction. A trim fault is visually and aurally annunciated.

A lockout device prevents autopilot engagement until the system has been successfully preflight tested.

The following conditions will cause the Autopilot to automatically disengage:
(a) Power failure.
(b) Internal Flight Control System failure.
(c) With the KCS 55A Compass System, a loss of compass valid (displaying HDG flag) disengages the Autopilot when a mode using heading information is engaged. With the HDG flag present only the autopilot wings level mode can be selected.
(d) Roll rates in excess of 16° per second will cause the autopilot to disengage except when the CWS switch is held depressed.

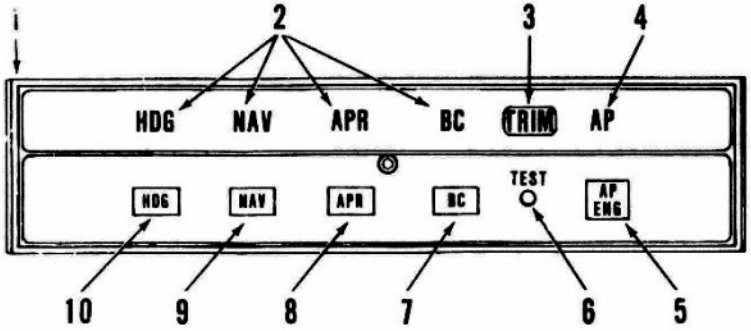

KC 190 AUTOPILOT COMPUTER
Figure 7-1

1. KAP 100 AUTOPILOT COMPUTER - Complete Autopilot computer to include system mode annunciators and system controls.
2. MODE ANNUNCIATORS - Illuminate when a mode is selected by the corresponding mode selector button (PUSH ON - PUSH OFF).
3. TRIM WARNING LIGHT (TRIM) - Illuminates continuously whenever trim power is not on or the system has not been preflight tested. The TRIM warning light will flash and be accompanied by an audible warning whenever a manual pitch trim malfunction occurs (trim running without being commanded to run).
4. AUTOPILOT ANNUNCIATOR (AP) - Illuminates continuously whenever the autopilot is engaged. Flashes approximately 12 times whenever the autopilot is disengaged (an aural alert will also sound for 2 seconds).
5. AUTOPILOT ENGAGE (AP ENG) BUTTON - When pushed, engages autopilot if all logic conditions are met.

Figure 7-1 (cont)

6. PREFLIGHT TEST (TEST) BUTTON - When momentarily pushed, initiates preflight test sequence which automatically turns on all annunciator lights, tests the roll rate monitor, checks the manual trim drive voltage, checks the manual electric trim monitor and tests all autopilot valid and dump logic. If the preflight is, successfully passed, the AP annunciator light will flash for approximately 6 seconds (an aural tone will also sound simultaneously with the annunciator flashes). The autopilot cannot be engaged until the preflight test is successfully passed.
7. BACK COURSE APPROACH (BC) MODE SELECTOR BUTTON - When pushed, will select the Back Course Approach mode. This mode functions identically to the approach mode except that response to LOC signals is reversed.
8. APPROACH (APR) MODE SELECTOR BUTTON - When pushed, will select the Approach mode. This mode provides all angle intercept (with HSI) or a fixed angle intercept of 45° (with DG), automatic beam capture and tracking of VOR, RNAV or LOC signals. The tracking gain of the APR mode is greater than the gain in the NAV mode. The APR annunciator will flash until the automatic capture sequence is initiated.
9. NAVIGATION (NAV) MODE SELECTOR BUTTON - When pushed, will select the Navigation mode. The mode provides all angle intercept (with HSI) or a fixed angle intercept of 45° (with DG), automatic beam capture and tracking of VOR, RNAV or LOC signals. The NAV annunciator will flash until the automatic capture sequence is initiated.
10. HEADING (HDG) MODE SELECTOR BUTTON - When pushed, will select the Heading mode, which commands the airplane to turn to and maintain the heading selected by the heading bug on the DG or HSI. A new heading may be selected at any time and will result in the airplane turning to the new heading with a maximum bank angle of about 20°. Selecting HDG mode will cancel NAV, APR or BC track modes.

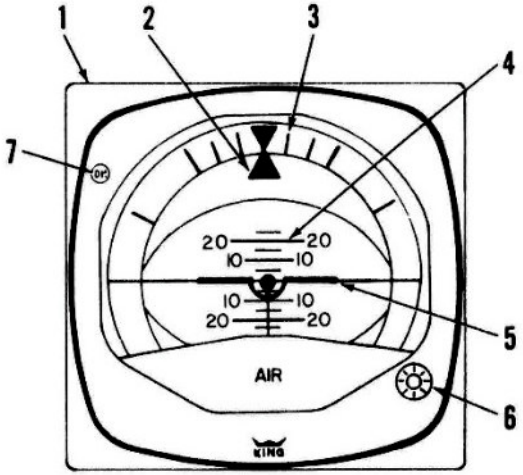

KG 258 VERTICAL GYRO
Figure 7-3

1. KG 258 VERTICAL GYRO - Displays airplane attitude as a conventional attitude gyro. The gyro is air driven.
2. ROLL ATTITUDE INDEX - Displays airplane roll attitude with respect to the roll attitude scale.
3. ROLL ATTITUDE SCALE - Scale marked at 0, ±10, ±20, ±30, ±60 and ±90 degrees.
4. PITCH ATTITUDE SCALE - Moves with respect to the symbolic airplane to present pitch attitude. Scale graduated at 0, ±5, ±10, ±15, ±20 and ±25 degrees.
5. SYMBOLIC AIRPLANE - Serves as a stationary symbol of the aircraft. Aircraft pitch and roll attitudes are displayed by the relationship between the fixed symbolic aircraft and the movable background.
6. SYMBOLIC AIRCRAFT ALIGNMENT KNOB - Provides manual positioning of the symbolic aircraft for level flight under various load conditions.
7. DECISION HEIGHT (DH) ANNUNCIATOR LIGHT - Optional light for use with the aircraft's optional radar altimeter.

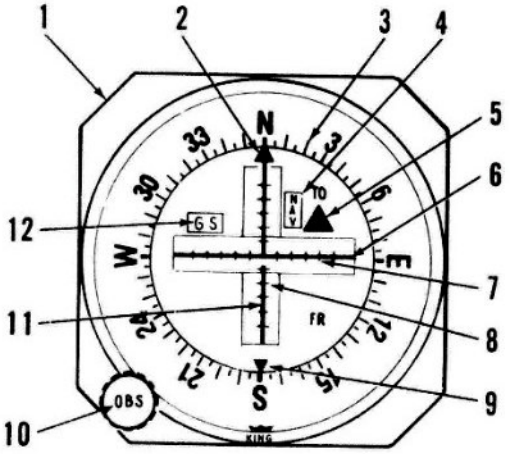

KI 204/206 VOR/LOC/
GLIDE SLOPE INDICATOR (TYPICAL)
Figure 7-5

1. VOR/LOC/GLIDE SLOPE INDICATOR - Provides rectilinear display of VOR/LOC and Glide slope deviation.
2. COURSE INDEX - Indicates selected VOR course.
3. COURSE CARD - Indicates selected VOR course under course index.
4. NAV FLAG - Flag is in view when the NAV receiver signal is inadequate. When a NAV flag is present in the navigation indicator (CDI or KI 525A) the autopilot operation is not affected. The pilot must monitor the navigation indicators for NAV flags to insure that the Autopilot is tracking valid navigation information.
5. TO/FROM INDICATOR FLAG - Indicates direction of VOR station relative to selected course.
6. GLIDE SLOPE DEVIATION NEEDLE - Indicates deviation from ILS glide slope.
7. COURSE DEVIATION SCALE - A course deviation bar displacement of 5 dots represents full scale (VOR = ±10°, LOC = ±2 1/2°, RNAV = 5NM, RNAV APR - 1 1/4NM) deviation from beam centerline.

Figure 7-5 (cont)

8. GLIDE SLOPE SCALE - Indicates displacement from glide slope beam center. A glide slope deviation needle displacement of 5 dots, represents full scale (0.7°) deviation above or below glide slope beam centerline.
9. RECIPROCAL COURSE INDEX - Indicates reciprocal of selected VOR course.
10. OMNI BEARING SELECTOR (OBS) KNOB - Rotates course card to selected course.
11. COURSE DEVIATION NEEDLE - Indicates course deviation from selected omni course or localizer centerline.
12. GLIDE SLOPE (GS) FLAG - Flag is in view when the GS receiver signal is inadequate.

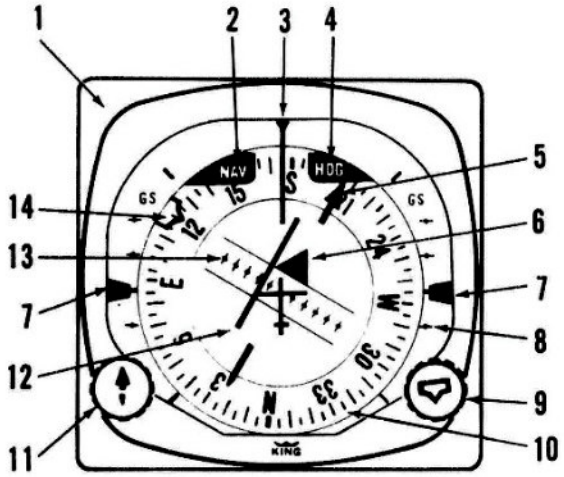

KI 525A HORIZONTAL SITUATION INDICATOR
Figure 7-7

Figure 7-7 (cont)

1. KI 525A HORIZONTAL SITUATION INDICATOR (HSI) - Provides a pictorial presentation of aircraft deviation relative to VOR radials or localizer beams. It also displays glide slope deviations and gives heading reference with respect to magnetic north.
2. NAV FLAG - Flag is in view when the NAV receiver signal is inadequate. When a NAV flag is present in the navigation indicator (CDI or KI 525A) the autopilot operation is not affected. The pilot must monitor the navigation indicators for NAV flags to insure that the Autopilot is tracking valid navigation information.
3. LUBBER LINE - Indicates aircraft magnetic heading on compass card (10).
4. HEADING WARNING FLAG (HDG) - When flag is in view the heading display is invalid. If a HDG flag appears and a lateral mode (HDG, NAV, APR or APR BC) is selected, the Autopilot will be disengaged. The Autopilot may be re-engaged in the basic wings level mode. The CWS switch would be used manually to maneuver the aircraft laterally.
5. COURSE BEARING POINTER - Indicates selected VOR course or localizer course on compass card (10). The selected VOR radial or localizer heading remains set on the compass card when the compass card (10) rotates.
6. TO/FROM INDICATOR FLAG - Indicates direction of VOR station relative to selected course.
7. DUAL GLIDE SLOPE POINTERS - Indicate on glide slope scale (8) aircraft displacement from glide slope beam center. Glide slope pointers in view indicate a usable glide slope signal is being received.
8. GLIDE SLOPE SCALES - Indicate displacement from glide slope beam center. A glide slope deviation bar displacement of 2 dots, represents full scale (0.7°) deviation above or below glide slope beam centerline.
9. HEADING SELECTOR KNOB ( ) - Positions heading Bug (14) on compass card (10) by rotating the heading selector knob. The Bug rotates with the compass card.
10. COMPASS CARD - Rotates to display heading of airplane with reference to lubber line (3).
11. COURSE SELECTOR KNOB - Positions course bearing pointer (5) on the compass card (10) by rotating the course selector knob.
12. COURSE DEVIATION BAR (D-BAR) - The center portion of omni bearing pointer moves laterally to pictorially indicate the relationship of aircraft to selected course. It indicates in degrees of angular displacement from VOR radials and localizer beams or displacement in nautical miles from RNAV courses.

Figure 7-7 (cont)

13. COURSE DEVIATION SCALE - A course deviation bar displacement of 5 dots represents full scale (VOR = ±10°, LOC = ±2 1/2°, RNAV = 5NM, RNAV APR - 1 1/4NM) deviation from beam centerline.
14. HEADING BUG - Moved by ( ) knob (9) to select desired heading.

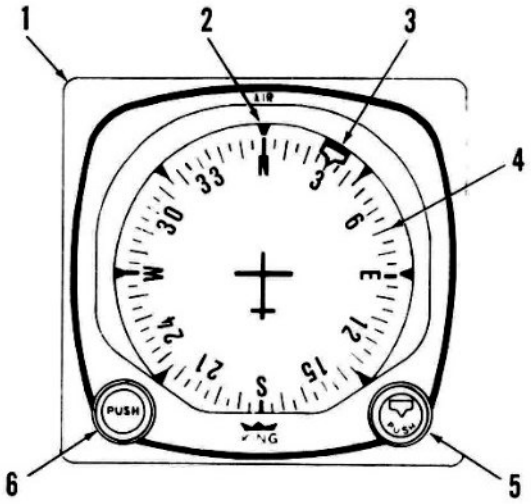

KG 107 NON-SLAVED DIRECTIONAL GYRO
Figure 7-9

Figure 7-9 (cont)

1. KG 107 NON-SLAVED DIRECTIONAL GYRO (DG) - Provides a stable visual indication of aircraft heading to the pilot. The gyro is air driven.
2. LUBBER LINE - Indicates aircraft magnetic heading on compass card (4).
3. HEADING BUG - Moved by ( ) knob (5) to select desired heading.
4. COMPASS CARD - Rotates to display heading of airplane with reference to lubber line (2).
5. HEADING SELECTOR KNOB ( ) - Positions heading Bug (3) on compass card (4) by rotating the heading selector knob. The Bug rotates with the compass card.
6. GYRO ADJUSTMENT KNOB (PUSH) - When pushed in, allows the pilot to manually rotate the gyro compass card (4) to correspond with the magnetic heading indicated by the magnetic compass. The unslaved compass card must be manually reset periodically to compensate for precessional errors in the gyro.

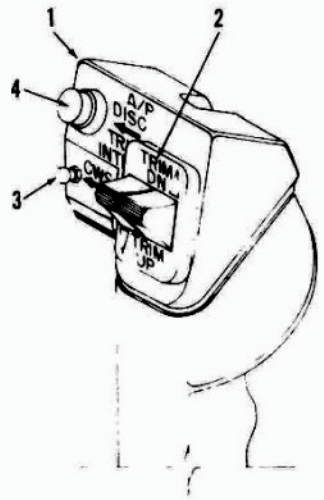

AUTOPILOT CONTROL WHEEL SWITCH CAP
Figure 7-11

1. AUTOPILOT CONTROL WHEEL SWITCH CAP - Molded plastic unit mounted on the left horn of the pilot's control wheel which provides mounting for three switch units associated with the autopilot and manual electric trim systems (only used with optional manual electric trim).
2. MANUAL ELECTRIC TRIM CONTROL SWITCHES - A split switch unit in which the left half provides power to engage the trim servo clutch and the right half to control the direction of motion of the trim servo motor. Both halves of the split trim switch must be actuated in order for the manual trim to operate in the desired direction.
3. CONTROL WHEEL STEERING (CWS) BUTTON - When depressed, allows pilot to manually control the aircraft (disengages the servo) without cancellation of any of the selected modes.
4. AUTOPILOT DISCONNECT/TRIM INTERRUPT (AP DISC/TRIM INTER) Switch - When depressed and released, will disengage the autopilot and cancel all operating autopilot modes. When depressed and held, will interrupt all electric trim power (stop trim motion), disengage the autopilot, and cancel all operating autopilot modes.

The airplane MASTER SWITCH function is unchanged and can be used in an emergency to shut off electrical power to all flight control systems while the problem is isolated.

The RADIO POWER switch supplies power to the avionics bus bar of the radio circuit breakers and the autopilot circuit breaker.

The following circuit breakers are used to protect the following elements of the King KAP 100 Autopilot:

AUTOPILOT - Supplies power to the KC 190, the autopilot roll servo, and the Pitch Trim Circuit Breaker.

PITCH TRIM - Supplies power to the optional manual electric pitch trim system.

COMP-SYSTEM - Supplies power to the optional KCS 55A Compass System.

THIS PAGE INTENTIONALLY LEFT BLANK

PILOT'S OPERATING HANDBOOK AND FAA APPROVED AIRPLANE FLIGHT MANUAL

SUPPLEMENT NO. 8 FOR KING KAP 150 SERIES FLIGHT CONTROL SYSTEM

This supplement must be attached to the Pilot's Operating Handbook and FAA Approved Airplane Flight Manual when the King KAP 150 Series Flight Control System is installed in accordance with STC SA1565CE-D. The information contained herein supplements or supersedes the information in the basic Pilot's Operating Handbook and FAA Approved Airplane Flight Manual only in those areas listed herein. For limitations, procedures and performance information not contained in this supplement, consult the basic Pilot's Operating Handbook and FAA Approved Airplane Flight Manual.

FAA APPROVED Ward Evans

WARD EVANS
D.O.A. NO. SO-1
PIPER AIRCRAFT CORPORATION
VERO BEACH, FLORIDA

DATE OF APPROVAL JULY 21, 1982

SECTION 1 - GENERAL

This supplement supplies information necessary for the operation of the airplane when the optional King KAP 150 Series Flight Control System is installed. The Flight Control System must be operated within the limitations herein specified. The information contained within this supplement is to be used in conjunction with the complete handbook.

This supplement has been FAA Approved as a permanent part of this handbook and must remain in this handbook at all times when the optional King KAP 150 Series Flight Control System is installed.

SECTION 2 - LIMITATIONS

(a) During autopilot operation, a pilot with seat belt fastened must be seated at the left pilot position.
(b) The autopilot must be OFF during takeoff and landing.
(c) The system is approved for Category I operation only (Approach mode selected).
(d) Autopilot airspeed limitation: Maximum 135 KIAS.

NOTE

In accordance with FAA recommendation, use of "altitude hold" mode is not recommended during operation in severe turbulence.

SECTION 3 - EMERGENCY PROCEDURES

(a) In case of Autopilot malfunction: (accomplish items 1. and 2. simultaneously)

(1) Airplane Control Wheel - GRASP FIRMLY and regain aircraft control.
(2) AP DISC/TRIM INTER Switch - PRESS and HOLD.
(3) AP DISC/TRIM INTER Switch - RELEASE while observing pitch trim wheel. If pitch trim wheel is in motion, follow the Electric Trim Malfunction Procedure.

(b) In case of Electric Trim Malfunction (either manual electric or autotrim):

(1) AP DISC/TRIM INTER Switch - PRESS and HOLD throughout recovery.
(2) PITCH TRIM Circuit Breaker - PULL.
(3) Aircraft - RETRIM manually.

CAUTION

When disconnecting the autopilot after a trim malfunction, hold the control wheel firmly; up to 45 pounds of force on the control wheel may be necessary to hold the aircraft level.

Maximum Altitude losses due to autopilot malfunction:

Configuration	Alt Loss
Cruise, Climb, Descent	310 ′
Maneuvering	90 ′
APPR	85 ′

SECTION 4 - NORMAL PROCEDURES

(a) PREFLIGHT (PERFORM PRIOR TO EACH FLIGHT)

(1) GYROS - Allow 3-4 minutes for gyros to come up to speed.
(2) RADIO POWER /AVIONICS MASTER Switch - ON.
(3) PREFLIGHT TEST BUTTON - PRESS momentarily and NOTE:
a. All annunciator lights on (TRIM annunciator flashing).
b. After approximately 5 seconds, all annunciator lights off except AP which will flash approximately 12 times and then remain off.

NOTE

If trim warning light stays on then the autotrim did not pass preflight test. The autopilot circuit breakers should be pulled. Manual electric trim cannot be used.

(4) MANUAL ELECTRIC TRIM - TEST as follows:
   a. Actuate the left side of the split switch to the fore and aft positions. The trim wheel should not move on its own. Rotate the trim wheel manually against the engaged clutch, to check the pilot's overpower capability.
   b. Actuate right side of split switch unit to the fore and aft positions. The trim wheel should not move on its own and normal trim wheel force is required to move it manually.
   c. Press the AP DISC/TRIM INTER switch down and hold. Manual Electric Trim should not operate either nose up or nose down.

(5) FLIGHT DIRECTOR (KFC 150 ONLY) - ENGAGE by pressing FD or CWS button.

(6) AUTOPILOT - ENGAGE by pressing AP ENG button.

(7) CONTROL WHEEL - MOVE fore, aft, left and right to verify that the autopilot can be overpowered.

(8) AP DISC/TRIM INTER Switch - PRESS. Verify that the autopilot disconnects and all flight director modes are cancelled.

(9) TRIM - SET to take off position.

(b) AUTOPILOT OPERATION

(1) Before takeoff
AP DISC/TRIM INTER Switch - PRESS.

(2) Autopilot Engagement
   a. FD Mode Selector Button (KFC 150 Only) - PRESS.
   b. AP ENG Button - PRESS. Note AP annunciator on. If no other modes are selected the autopilot will operate in wings level and pitch attitude hold.

(3) Climb or Descent
   a. Using CWS
      1. CWS Button - PRESS and MOVE aircraft nose to the desired attitude.
      2. CWS Button - RELEASE. Autopilot will maintain aircraft pitch attitude up to the pitch limits of +15° or -10°.

   b. Using Vertical Trim
      1. VERTICAL TRIM Control - PRESS either up or down to modify aircraft attitude at a rate of .7 deg/sec. up to the pitch limits of +15° or -10°.
      2. VERTICAL TRIM Control - RELEASE when desired aircraft attitude is reached. The autopilot will maintain the desired pitch attitude.

(4) Altitude Hold
   a. ALT Mode Selector Button - PRESS. Note ALT mode annunciator ON. Autopilot will maintain the selected pressure altitude.

   b. Change selected altitudes
      1. Using CWS (recommended for altitude changes greater than 100 ft.)
      CWS Button - PRESS and fly aircraft to desired pressure altitude.

      CWS Button - RELEASE when desired pressure altitude is reached. The autopilot will maintain the desired pressure altitude.
      2. Using Vertical Trim (Recommended for altitude changes less than 100 ft.)
      VERTICAL TRIM Control - PRESS either up or down. Vertical Trim will seek an altitude rate of change of 600 ± 100 fpm.

      VERTICAL TRIM Control - RELEASE when desired pressure altitude is reached. The autopilot will maintain the desired pressure altitude.

(5) Heading Changes
   a. Manual Heading Changes
      1. CWS Button - PRESS and MANEUVER aircraft to the desired heading.
      2. CWS Button - RELEASE. Autopilot will maintain aircraft in wings level attitude.

NOTE

Aircraft heading may change in the wings level mode due to an aircraft out of trim condition.

b. Heading Hold
   1. Heading Selector Knob - SET BUG to desired heading.
   2. HDG Mode Selector Button - PRESS. Note HDG mode annunciator ON. Autopilot will automatically turn the aircraft to the selected heading.

c. Command Turns (Heading Hold mode ON)
   HEADING Selector Knob - MOVE BUG to the desired heading. Autopilot will automatically turn the aircraft to the new selected heading.

(6) NAV Coupling
   a. When equipped with HSI.
      1. Course Bearing Pointer - SET to desired course.

NOTE

When equipped with NAV 1/NAV 2 switching and NAV 2 is selected, set OBS to the desired course.

      2. HEADING Selector Knob - SET BUG to provide desired intercept angle.
      3. NAV Mode Selector Button - PRESS.
         If the Course Deviation Bar is greater than 2 to 3 dots: the aircraft will continue in HDG mode (or wings level if HDG not selected) with the NAV annunciator flashing; when the computed capture point is reached the HDG will disengage, the NAV annunciator will illuminate steady and the selected course will be automatically captured and tracked.

         If the D-Bar is less than 2 to 3 dots: the HDG mode will disengage upon selecting NAV mode; the NAV annunciator will illuminate steady and the capture/track sequence will automatically begin.

   b. When equipped with DG
      1. OBS Knob - SELECT desired course.
      2. NAV Mode Selector Button - PRESS.

      3. Heading Selector Knob - ROTATE BUG to agree with OBS course.

NOTE

When NAV is selected, the lateral operating mode will change from HDG (if selected) to wings level for 5 seconds. A 45° intercept angle will then be automatically established based on the position of the bug.

         If the D-Bar is greater than 2 to 3 dots: the autopilot will annunciate HDG mode and NAV flashing; when the computed capture point is reached the HDG annunciator will go out, the NAV annunciator will illuminate steady and the selected course will be automatically captured and tracked.

         If the D-Bar is less than 2 to 3 dots: the HDG mode will disengage upon selecting NAV mode; the NAV annunciator will illuminate steady and the capture/track sequence will automatically begin.

(7) Approach (APR) Coupling
   a. When equipped with HSI
      1. Course Bearing Pointer - SET to desired course.

NOTE

When equipped with NAV 1/NAV 2 switching and NAV 2 is selected, set OBS to the desired course.

      2. HEADING Selector Knob - SET BUG to provide desired intercept angle.
      3. APR Mode Selector Button - PRESS.
         If the Course Deviation Bar is greater than 2 to 3 dots: the aircraft will continue in HDG mode (or wings level if HDG not selected) with the APR annunciator flashing; when the computed capture point is reached the HDG will disengage, the APR annunciator will illuminate steady and the selected course will be automatically captured and tracked.

If the D-Bar is less than 2 to 3 dots: the HDG mode will disengage upon selecting APR mode; the APR annunciator will illuminate steady and the capture/track sequence will automatically begin.

b. When equipped with DG
   1. OBS Knob - SELECT desired approach course.
   2. APR Mode Selector Button - PRESS.
   3. Heading Selector Knob - ROTATE Bug to agree with OBS course.

NOTE

When APR is selected, the lateral operating mode will change from HDG (if selected) to wings level for 5 seconds. A 45° intercept angle will then be automatically established based on the position of the bug.

If the D-Bar is greater than 2 to 3 dots: the autopilot will annunciate HDG mode (unless HDG not selected) and APR flashing; when the computed capture point is reached the HDG annunciator will go out, the APR annunciator will illuminate steady and the selected course will be automatically captured and tracked.

If the D-Bar is less than 2 to 3 dots: the HDG mode will disengage upon selecting APR mode; the APR annunciator will illuminate steady and the capture/track sequence will automatically begin.

(8) BC Approach Coupling
   a. When equipped with HSI
      1. Course Bearing Pointer - SET to the ILS front course inbound heading.

NOTE

When equipped with NAV 1/NAV 2 switching and NAV 2 is selected, set OBS to the ILS front course inbound heading.

2. HEADING Selector Knob - SET BUG to provide desired intercept angle.

3. BC Mode Selector Button - PRESS.
   If the Course Deviation Bar is greater than 2 to 3 dots: the aircraft will continue in HDG mode (or wings level if HDG not selected) with BC annunciated steady and APR annunciator flashing; when the computed capture point is reached the HDG will disengage, and the BC and APR annunciators will illuminate steady and the selected course will be automatically captured and tracked.

   If the D-Bar is less than 2 to 3 dots: the HDG mode will disengage upon selecting BC mode; the APR BC annunciator will illuminate steady and the capture/track sequence will automatically begin.

b. When equipped with DG
   1. OBS Knob - SELECT the ILS front course inbound heading.
   2. BC Mode Selector Button - PRESS.
   3. Heading Selector Knob - ROTATE Bug to the ILS front course inbound heading.

NOTE

When BC is selected, the lateral operating mode will change from HDG (if selected) to wings level for 5 seconds. A 45° intercept angle will then be established based on the position of the bug.

If the D-Bar is greater than 2 to 3 dots: the autopilot will annunciate HDG (unless HDG not selected) and BC modes with APR flashing; when the computed capture point is reached the HDG annunciator will go out, the BC and APR annunciators will illuminate steady and the selected course will be automatically captured and tracked.

If the D-Bar is less than 2 to 3 dots: the HDG mode will disengage upon selecting BC mode; the BC and APR annunciators will illuminate steady and the capture/track sequence will automatically begin.

(9) Glide Slope Coupling

NOTE

Glide slope coupling is inhibited when operating in NAV or APR BC modes. Glide slope coupling occurs automatically in the APR mode.

a. APR Mode - ENGAGED.
b. At glide slope centering - NOTE GS annunciator ON.

NOTE

Autopilot can capture glide slope from above or below the beam while operating in either pitch attitude hold or ALT hold modes.

(10) Missed Approach
a. AP DISC/TRIM INTER Switch - PRESS to disengage AP.
b. MISSED APPROACH - EXECUTE.
c. CWS Button - PRESS (KFC 150 only) as desired to activate FD mode during go-around maneuver.
d. AP ENG Button - PRESS (if AP operation is desired). Note AP annunciator ON.

NOTE

If it is desired to track the ILS course outbound as part of the missed approach procedure, use the NAV mode to prevent inadvertent GS coupling.

(11) Before Landing
AP DISC/TRIM INTER Switch - PRESS to disengage AP.

(c) FLIGHT DIRECTOR OPERATION (KFC 150 SYSTEMS ONLY)

NOTE

The flight director modes of operation are the same as those used for autopilot operations except the autopilot is not engaged and the pilot must maneuver the aircraft to satisfy the flight director commands.

SECTION 5 - PERFORMANCE

No change.

SECTION 6 - WEIGHT AND BALANCE

Factory installed optional equipment is included in the licensed weight and balance data in Section 6 of the basic Pilot's Operating Handbook.

SECTION 7 - DESCRIPTION AND OPERATION

The 150 Series AFCS is certified in this airplane with 2 axis control, pitch and roll. The various instruments and the controls for the operation of the 150 System are described in Figures 7-1 thru 7-15.

The 150 Series AFCS has an electric pitch trim system which provides autotrim during autopilot operation and manual electric trim for the pilot. The trim system is designed to withstand any single inflight malfunction. Trim faults are visually and aurally annunciated.

A lockout device prevents autopilot engagement until the system has been successfully preflight tested.

The following conditions will cause the Autopilot to automatically disengage:

(a) Power failure.
(b) Internal Flight Control System failure.
(c) With the KCS 55A Compass System, a loss of compass valid (displaying HDG flag) disengages the Autopilot when a mode using heading information is engaged. With the HDG flag present, the Autopilot may be re-engaged in the basic wings level mode along with any vertical mode.
(d) Roll rates in excess of 16° per second will cause the autopilot to disengage except when the CWS switch is held depressed.
(e) Pitch rates in excess of 6° per second will cause the autopilot to disengage except when the CWS switch is held depressed.

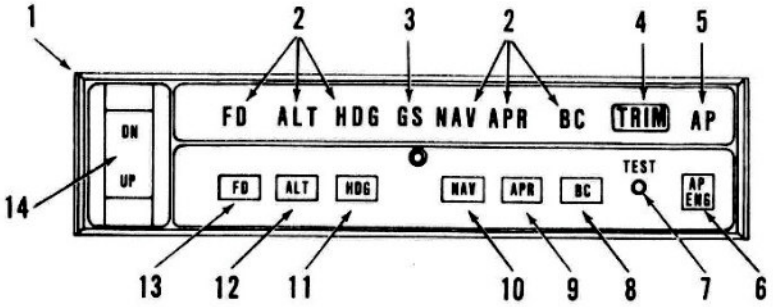

KC 192 AUTOPILOT & FLIGHT DIRECTOR COMPUTER
Figure 7-1

1. KFC 150 SYSTEM KC 192 AUTOPILOT COMPUTER - Complete Flight Director and Autopilot computer to include system mode annunciators and system controls.
2. MODE ANNUNCIATORS - Illuminates when a mode is selected by the corresponding mode selector button (PUSH ON - PUSH OFF) or when the glide slope (GS) mode is automatically engaged.
3. GLIDE SLOPE (GS) ANNUNCIATOR - Illuminates continuously whenever the autopilot is coupled to the glide slope signal. The GS annunciator will flash if the glide slope signal is lost (GS flag in CDI or absence of glide slope pointers in KI 525A). The autopilot reverts to pitch attitude hold operation. If a valid glide slope signal returns within six seconds, the autopilot will automatically recouple in the GS mode. If the valid signal does not return within six seconds, the autopilot will remain in pitch attitude hold mode until such time that a valid glide slope returns and the aircraft passes thru the glide slope. At that point GS couple will re-occur.
4. TRIM WARNING LIGHT (TRIM) - Illuminates continuously whenever trim power is not on or the system has not been preflight tested. The TRIM warning light flashes and is accompanied by an audible warning whenever a manual trim fault is detected. The TRIM warning light will illuminate steady and be accompanied by a steady audible tone whenever an autotrim failure occurs. The autotrim system is monitored for the following failures: trim servo running without a command; trim servo not running when commanded to run; trim servo running in the wrong direction. The trim circuit breaker may be cycled off to silence the continuous tone but the trim fail light will remain on. The manual electric trim may be used but the autopilot should not be engaged.
5. AUTOPILOT ANNUNCIATOR (AP) - Illuminates continuously whenever the autopilot is engaged. Flashes approximately 12 times whenever the autopilot is disengaged (an aural alert will also sound for 2 seconds).
6. AUTOPILOT ENGAGE (AP ENG) BUTTON - When pushed, engages autopilot if all logic conditions are met.
7. PREFLIGHT TEST (TEST) BUTTON - When momentarily pushed, initiates preflight test sequence which automatically turns on all annunciator lights, tests the roll and pitch rate monitors, tests the autotrim fault monitor, checks the manual trim drive voltage and tests all autopilot valid and dump logic. If the preflight is successfully passed, the AP annunciator light will flash for approximately 6 seconds (an aural tone will also sound simultaneously with the annunciator flashes). The autopilot cannot be engaged until the autopilot preflight tests are successfully passed.

Figure 7-1 (cont)

8. BACK COURSE APPROACH (BC) MODE SELECTOR BUTTON - When pushed, will select the Back Course Approach mode. This mode functions identically to the approach mode except that response to LOC signals is reversed. Glide slope coupling is inhibited in the Back Course Approach mode.
9. APPROACH (APR) MODE SELECTOR BUTTON - When pushed, will select the Approach mode. This mode provides all angle intercept (with HSI) or a fixed angle intercept of 45° (with DG), automatic beam capture and tracking of VOR, RNAV or LOC signals plus glide slope coupling in the case of an ILS. The tracking gain of the APR mode is greater than the gain in the NAV mode. The APR annunciator will flash until the automatic capture sequence is initiated.
10. NAVIGATION (NAV) MODE SELECTOR BUTTON - When pushed, will select the Navigation mode. The mode provides all angle intercept (with HSI) or a fixed angle intercept of 45° (with DG), automatic beam capture and tracking of VOR, RNAV or LOC signals. The NAV annunciator will flash until the automatic capture sequence is initiated.
11. HEADING (HDG) MODE SELECTOR BUTTON - When pushed, will select the Heading mode, which commands the airplane to turn to and maintain the heading selected by the heading bug on the DG or HSI. A new heading may be selected at any time and will result in the airplane turning to the new heading with a maximum bank angle of about 20°. Selecting HDG mode will cancel NAV, APR or BC track modes.
12. ALTITUDE HOLD (ALT) MODE SELECTOR BUTTON - When pushed, will select the Altitude Hold mode, which commands the airplane to maintain the pressure altitude existing at the moment of selection. Engagement may be accomplished in climb, descent, or level flight. In the APR mode, altitude hold will automatically disengage when the glide slope is captured.
13. FLIGHT DIRECTOR (FD) MODE SELECTOR BUTTON - When pushed, will select the Flight Director mode (with KC 192 Autopilot Computer only), bringing the Command Bar in view on the KI 256 and will command wings level and pitch attitude hold. The FD mode must be selected prior to Autopilot engagement.
14. VERTICAL TRIM CONTROL - A spring loaded to center rocker switch which will provide up or down pitch command changes: while in ALT will adjust altitude at rate of about 500 fpm; when not in ALT will adjust pitch attitude at a rate of .7 deg/sec. Will cancel GS couple. The aircraft must pass through the glide slope again to allow GS recouple.

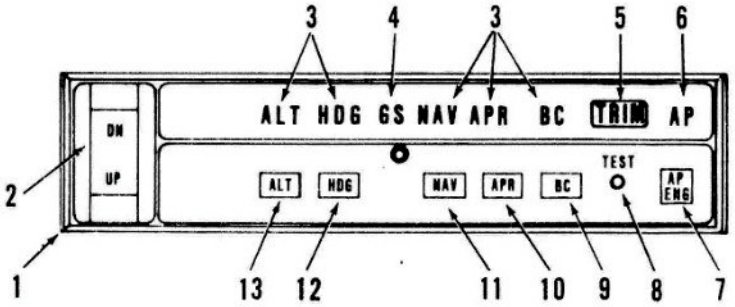

KC 191 AUTOPILOT COMPUTER
Figure 7-3

1. KFC 150 SYSTEM KC 191 AUTOPILOT COMPUTER - Complete Autopilot computer. Includes system mode annunciators and system controls.
2. VERTICAL TRIM CONTROL - A spring loaded to center rocker switch which will provide up or down pitch command changes: while in ALT will adjust altitude at rate of about 500 fpm; when not in ALT will adjust pitch attitude at a rate of .7 deg/sec. Will cancel GS couple. The aircraft must pass through the glide slope again to allow GS recouple.
3. MODE ANNUNCIATORS - Illuminate when a mode is selected by the corresponding mode selector button (PUSH ON - PUSH OFF) or when the glide slope (GS) mode is automatically engaged.
4. GLIDE SLOPE (GS) ANNUNCIATOR - Illuminates continuously whenever the autopilot is coupled to the glide slope signal. The GS annunciator will flash if the glide slope signal is lost (GS flag in CDI or absence of glide slope pointers in KI 525A). The autopilot reverts to pitch attitude hold operation. If a valid glide slope signal returns within six seconds, the autopilot will automatically recouple in the GS mode. If the valid signal does not return within six seconds, the autopilot will remain in pitch attitude hold mode until such time that a valid glide slope returns and the aircraft passes thru the glide slope. At that point GS couple will re-occur.

Figure 7-3 (cont)

5. TRIM WARNING LIGHT (TRIM) - Illuminates continuously whenever trim power is not on or the system has not been preflight tested. The TRIM warning light flashes and is accompanied by an audible warning whenever a manual trim fault is detected. The TRIM warning light will illuminate steady and be accompanied by a steady audible tone whenever an autotrim failure occurs. The autotrim system is monitored for the following failures: trim servo running without a command; trim servo not running when commanded to run; trim servo running in the wrong direction. The trim circuit breaker may be cycled off to silence the continuous tone but the trim fail light will remain on. The manual electric trim may be used but the autopilot should not be engaged.
6. AUTOPILOT ANNUNCIATOR (AP) - Illuminates continuously whenever the autopilot is engaged. Flashes approximately 12 times whenever the autopilot is disengaged (an aural alert will also sound for 2 seconds).
7. AUTOPILOT ENGAGE (AP ENG) BUTTON - When pushed, engages autopilot if all logic conditions are met.
8. PREFLIGHT TEST (TEST) BUTTON - When momentarily pushed, initiates preflight test sequence which automatically turns on all annunciator lights, tests the roll and pitch rate monitors, tests the autotrim fault monitor, checks the manual trim drive voltage and tests all autopilot valid and dump logic. If the preflight is successfully passed, the AP annunciator light will flash for approximately 6 seconds (an aural tone will also sound simultaneously with the annunciator flashes). The autopilot cannot be engaged until the autopilot preflight tests are successfully passed.
9. BACK COURSE APPROACH (BC) MODE SELECTOR BUTTON - When pushed, will select the Back Course Approach mode. This mode functions identically to the approach mode except that response to LOC signals is reversed. Glide slope coupling is inhibited in the Back Course Approach mode.
10. APPROACH (APR) MODE SELECTOR BUTTON - When pushed, will select the Approach mode. This mode provides all angle intercept (with HSI) or a fixed angle intercept of 45° (with DG), automatic beam capture and tracking of VOR, RNAV or LOC signals plus glide slope coupling in the case of an ILS. The tracking gain of the APR mode is greater than the gain in the NAV mode. The APR annunciator will flash until the automatic capture sequence is initiated.

Figure 7-3 (cont)

11. NAVIGATION (NAV) MODE SELECTOR BUTTON - When pushed, will select the Navigation mode. The mode provides all angle intercept (with HSI) or a fixed angle intercept of 45° (with DG), automatic beam capture and tracking of VOR, RNAV or LOC signals. The NAV annunciator will flash until the automatic capture sequence is initiated.
12. HEADING (HDG) MODE SELECTOR BUTTON - When pushed, will select the Heading mode, which commands the airplane to turn to and maintain the heading selected by the heading bug on the DG or HSI. A new heading may be selected at any time and will result in the airplane turning to the new heading with a maximum bank angle of about 20°. Selecting HDG mode will cancel NAV, APR or BC track modes.
13. ALTITUDE HOLD (ALT) MODE SELECTOR BUTTON - When pushed, will select the Altitude Hold mode, which commands the airplane to maintain the pressure altitude existing at the moment of selection. Engagement may be accomplished in climb, descent, or level flight. In the APR mode, altitude hold will automatically disengage when the glide slope is captured.

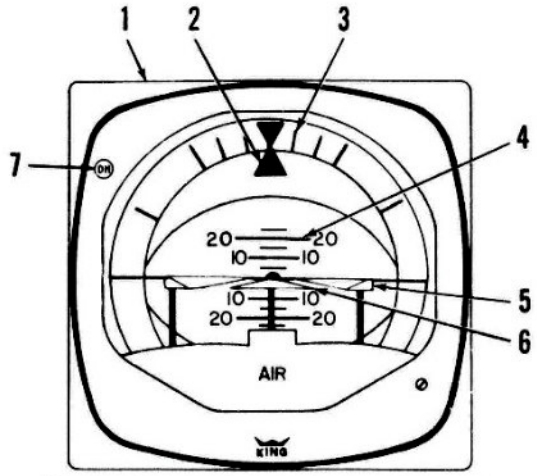

KI 256 FLIGHT COMMAND INDICATOR
Figure 7-5

1. KI 256 FLIGHT COMMAND INDICATOR (FCI) - Displays airplane attitude as a conventional attitude gyro and displays commands for flight director operation. The gyro is air driven.
2. ROLL ATTITUDE INDEX - Displays airplane roll attitude with respect to the roll attitude scale.
3. ROLL ATTITUDE SCALE - Scale marked at 0, ±10, ±20, ±30, ±60 and ±90 degrees.
4. PITCH ATTITUDE SCALE - Moves with respect to the symbolic airplane to present pitch attitude. Scale graduated at 0, ±5, ±10, ±15, ±20 and ±25 degrees.
5. COMMAND BAR - Displays computed steering commands referenced to the symbolic airplane. The command bar is visible only when FD mode is selected. The command bar will be biased out of view whenever the system is invalid or a Flight Director mode is not engaged.
6. FCI SYMBOLIC AIRPLANE - Airplane pitch and roll attitude is displayed by the relationship between the fixed symbolic airplane and the movable background. During flight director operation, the symbolic airplane is flown to align it with the command bar to satisfy the flight director commands.
7. DECISION HEIGHT (DH) ANNUNCIATOR LIGHT - Optional light for use with the aircraft's optional radar altimeter.

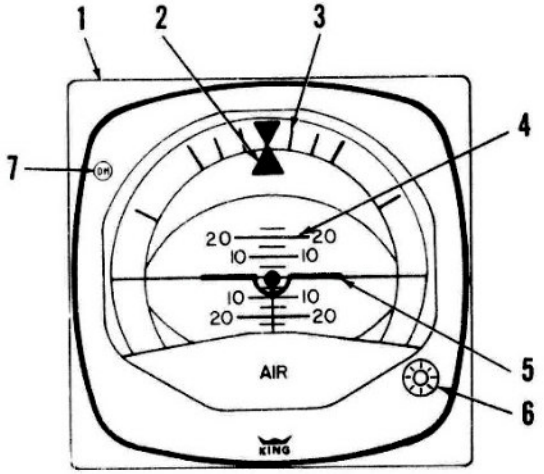

KG 258 VERTICAL GYRO
Figure 7-7

1. KG 258 VERTICAL GYRO - Displays airplane attitude as a conventional attitude gyro. The gyro is air driven.
2. ROLL ATTITUDE INDEX - Displays airplane roll attitude with respect to the roll attitude scale.
3. ROLL ATTITUDE SCALE - Scale marked at 0, ±10, ±20, ±30, ±60 and ±90 degrees.
4. PITCH ATTITUDE SCALE - Moves with respect to the symbolic airplane to present pitch attitude. Scale graduated at 0, ±5, ±10, ±15, ±20 and ±25 degrees.
5. SYMBOLIC AIRPLANE - Serves as a stationary symbol of the aircraft. Aircraft pitch and roll attitudes are displayed by the relationship between the fixed symbolic aircraft and the movable background.
6. SYMBOLIC AIRCRAFT ALIGNMENT KNOB - Provides manual positioning of the symbolic aircraft for level flight under various load conditions.
7. DECISION HEIGHT (DH) ANNUNCIATOR LIGHT - Optional light for use with the aircraft's optional radar altimeter.

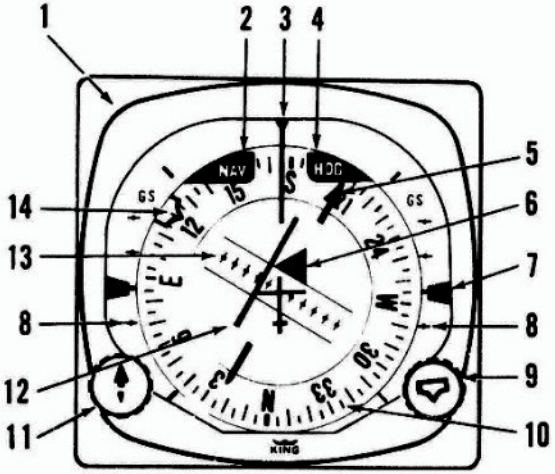

KI 525A HORIZONTAL SITUATION INDICATOR
Figure 7-9

1. KI 525A HORIZONTAL SITUATION INDICATOR (HSI) - Provides a pictorial presentation of aircraft deviation relative to VOR radials or localizer beams. It also displays glide slope deviations and gives heading reference with respect to magnetic north.
2. NAV FLAG - Flag is in view when the NAV receiver signal is inadequate. When a NAV flag is present in the navigation indicator (CDI or KI 525A) the autopilot operation is not affected. The pilot must monitor the navigation indicators for NAV flags to insure that the Autopilot and/or Flight Director are tracking valid navigation information.
3. LUBBER LINE - Indicates aircraft magnetic heading on compass card (10).
4. HEADING WARNING FLAG (HDG) - When flag is in view, the heading display is invalid. If a HDG flag appears and a lateral mode (HDG, NAV, APR or APR BC) is selected, the Autopilot will be disengaged. The Autopilot may be re-engaged in the basic wings level mode along with any vertical mode. The CWS switch would be used to maneuver the aircraft laterally.

Figure 7-9 (cont)

5. COURSE BEARING POINTER - Indicates selected VOR course or localizer course on compass card (10). The selected VOR radial or localizer heading remains set on the compass card when the compass card (10) rotates.
6. TO/FROM INDICATOR FLAG - Indicates direction of VOR station relative to selected course.
7. DUAL GLIDE SLOPE POINTERS - Indicate on glide slope scale (8) aircraft displacement from glide slope beam center. Glide slope pointers in view indicate a usable glide slope signal is being received.
8. GLIDE SLOPE SCALES - Indicate displacement from glide slope beam center. A glide slope deviation bar displacement of 2 dots, represents full scale (0.7°) deviation above or below glide slope beam centerline.
9. HEADING SELECTOR KNOB ( ) - Positions heading bug (14) on compass card (10) by rotating the heading selector knob. The Bug rotates with the compass card.
10. COMPASS CARD - Rotates to display heading of airplane with reference to lubber line (3).
11. COURSE SELECTOR KNOB - Positions course bearing pointer (5) on the compass card (10) by rotating the course selector knob.
12. COURSE DEVIATION BAR (D-BAR) - The center portion of omni bearing pointer moves laterally to pictorially indicate the relationship of aircraft to the selected course. It indicates degrees of angular displacement from VOR radials and localizer beams, or displacement in nautical miles from RNAV courses.
13. COURSE DEVIATION SCALE - A course deviation bar displacement of 5 dots represents full scale (VOR = ±10°, LOC = ±2 1/2°, RNAV = 5NM, RNAV APR = 1 1/4NM) deviation from beam centerline.
14. HEADING BUG - Moved by ( ) knob (9) to select desired heading.

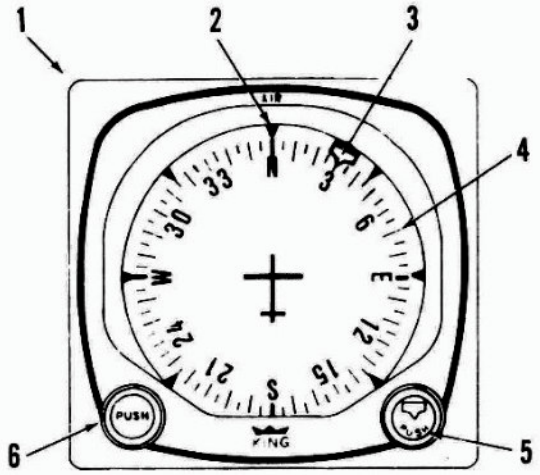

KG 107 NON-SLAVED DIRECTIONAL GYRO
Figure 7-11

1. KG 107 NON-SLAVED DIRECTIONAL GYRO (DG) - Provides a stable visual indication of aircraft heading to the pilot. The gyro is air driven.
2. LUBBER LINE - Indicates aircraft magnetic heading on compass card (4).
3. HEADING BUG - Moved by ( ) knob (5) to select desired heading.
4. COMPASS CARD - Rotates to display heading of airplane with reference to lubber line (2) on DG.
5. HEADING SELECTOR KNOB ( ) - Positions heading bug (3) on compass card (4) by rotating the heading selector knob. The Bug rotates with the compass card.
6. GYRO ADJUSTMENT KNOB (PUSH) - When pushed in, allows the pilot to manually rotate the gyro compass card (4) to correspond with the magnetic heading indicated by the magnetic compass. The unslaved compass card must be manually reset periodically to compensate for precessional errors in the gyro.

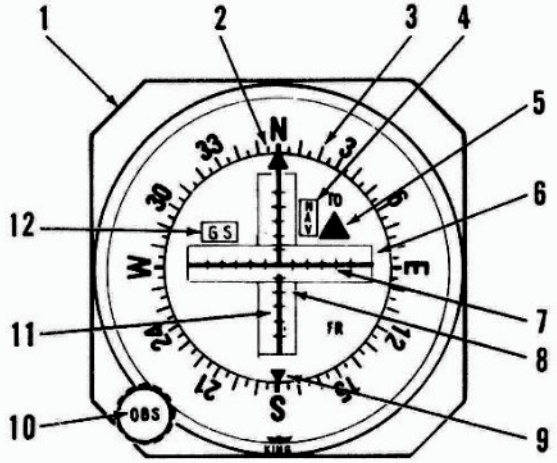

KI 204/206 VOR/LOC/
GLIDE SLOPE INDICATOR (TYPICAL)
Figure 7-13

1. VOR/LOC/GLIDE SLOPE INDICATOR - Provides rectilinear display of VOR/LOC and glide slope deviation.
2. COURSE INDEX - Indicates selected VOR course.
3. COURSE CARD - Indicates selected VOR course under course index.
4. NAV FLAG - Flag is in view when the NAV receiver signal is inadequate. When a NAV flag is present in the navigation indicator (CDI or KI 525A), the autopilot operation is not affected. The pilot must monitor the navigation indicators for NAV flags to insure that the Autopilot and/or Flight Director are tracking valid navigation information.
5. TO/FROM INDICATOR FLAG - Indicates direction of VOR station relative to selected course.
6. GLIDE SLOPE DEVIATION NEEDLE - Indicates deviation from ILS glide slope.
7. COURSE DEVIATION SCALE - A course deviation bar displacement of 5 dots represents full scale (VOR = ±10°, LOC = ±2 1/2°, RNAV = 5NM, RNAV APR = 1 1/4NM) deviation from beam centerline.

Figure 7-13 (cont)

8. GLIDE SLOPE SCALE - Indicates displacement from glide slope beam center. A glide slope deviation needle displacement of 5 dots, represents full scale (0.7°) deviation above or below glide slope beam centerline.
9. RECIPROCAL COURSE INDEX - Indicates reciprocal of selected VOR course.
10. OMNI BEARING SELECTOR (OBS) KNOB - Rotates course card to selected course.
11. COURSE DEVIATION NEEDLE - Indicates course deviation from selected omni course or localizer centerline.
12. GLIDE SLOPE (GS) FLAG - Flag is in view when the GS receiver signal is inadequate.

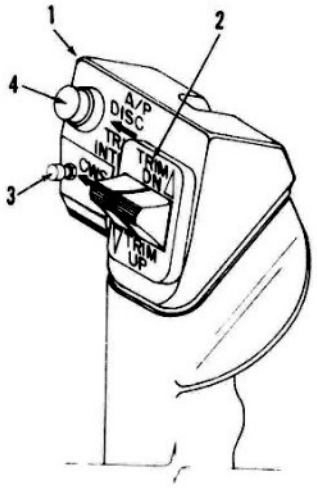

AUTOPILOT CONTROL WHEEL SWITCH CAP
Figure 7-15

Figure 7-15 (cont)

1. AUTOPILOT CONTROL WHEEL SWITCH CAP - Molded plastic unit mounted on the left horn of the pilot's control wheel which provides mounting for three switch units associated with the autopilot and manual electric trim systems.
2. MANUAL ELECTRIC TRIM CONTROL SWITCHES - A split switch unit in which the left half provides power to engage the trim servo clutch and the right half to control the direction of motion of the trim servo motor. Both halves of the split trim switch must be actuated in order for the manual trim to operate in the desired direction. When the autopilot is engaged, operation of the manual electric trim will automatically disconnect the autopilot.
3. CONTROL WHEEL STEERING (CWS) BUTTON - When depressed, allows pilot to manually control the aircraft (disengages the servos) without cancellation of any of the selected modes. Will engage the Flight Director mode if not previously engaged. Automatically synchronizes the Flight Director/Autopilot to the pitch attitude present when the CWS switch is released, or to the present pressure altitude when operating in the ALT hold mode. Will cancel GS couple. The aircraft must pass through the glide slope to allow GS recouple.
4. AUTOPILOT DISCONNECT/TRIM INTERRUPT (AP DISC/TRIM INTER) Switch - When depressed and released will disengage the autopilot and cancel all operating Flight Director modes. When depressed and held will interrupt all electric trim power (stop trim motion), disengage the autopilot, and cancel all operating Flight Director modes.

The airplane MASTER SWITCH function is unchanged and can be used in an emergency to shut off electrical power to all flight control systems while the problem is isolated.

The RADIO POWER switch supplies power to the avionics buss bar of the radio circuit breakers and the autopilot circuit breaker.

The following circuit breakers are used to protect the following elements of the King 150 Series Autopilot:

AUTOPILOT - Supplies power to the KC 192 or the KC 191 Computer, the autopilot pitch and roll servos, and the Pitch Trim Circuit Breaker.

PITCH TRIM - Supplies power to the autotrim and manual electric pitch trim systems.

COMP-SYSTEM - Supplies power to the optional KCS 55A Compass System.

SUPPLEMENT 9

KNS 80 NAVIGATION SYSTEM

SECTION 1 - GENERAL

This supplement supplies information necessary for the operation of the airplane when the optional KNS 80 Navigation System is installed. The information contained within this supplement is to be used in conjunction with the complete handbook.

This supplement has been "FAA Approved" as a permanent part of this handbook and must remain in this handbook at all times when the optional KNS 80 Navigation System is installed.

SECTION 2 - LIMITATIONS

No changes to the basic limitations provided by Section 2 of this Pilot's Operating Handbook are necessary for this supplement.

SECTION 3 - EMERGENCY PROCEDURES

No changes to basic Emergency Procedures provided by Section 3 of this Pilot's Operating Handbook are necessary for this supplement.

SECTION 4 - NORMAL PROCEDURES

(a) KNS 80 OPERATION

The KNS 80 can be operated in any one of 3 basic modes: (a) VOR, (b) RNAV, or (c) ILS. To change from one mode to another, the appropriate pushbutton switch is pressed, except that the ILS mode is entered automatically whenever an ILS frequency is channeled in the USE waypoint. The display will annunciate the mode by lighting a message above the pushbutton. In addition to the standard VOR and RNAV enroute (RNV ENR) modes, the KNS 80 has a constant course width or parallel VOR mode (VOR PAR) and an RNAV approach mode (RNV APR). To place the unit in either of these secondary modes the VOR pushbutton or the RNAV pushbutton, as the case may be, is pushed a second time. Repetitive pushing of the VOR button will cause the system to alternate between the VOR and VOR PAR modes, while repetitive pushing of the RNAV button causes the system to alternate between RNV ENR and RNV APR modes.

(b) CONTROLS

(1) VOR BUTTON

Momentary pushbutton.
When pushed while system is in either RNV mode causes system to go to VOR mode. Otherwise the button causes system to toggle between VOR and VOR PAR modes.

(2) RNAV BUTTON

Momentary pushbutton.
When pushed while system is in either VOR mode causes system to go to RNV ENR mode. Otherwise the button causes system to toggle between RNV ENR and RNV APR modes.

(3) HOLD BUTTON

Two position pushbutton.
When in depressed position, inhibits DME from channeling to a new station when the VOR frequency is changed. Pushing the button again releases the button and channels the DME to the station paired with the VOR station.

(4) USE BUTTON

Momentary pushbutton.
Causes active waypoint to take on same value as displayed waypoint and data display to go to FRQ mode.

(5) DSP BUTTON

Momentary pushbutton.
Causes displayed waypoint to increment by 1 and data display to go to frequency mode.

(6) DATA BUTTON

Momentary pushbutton.
Causes waypoint data display to change from FRQ to RAD to DST and back to FRQ.

(7) OFF/PULL ID CONTROL

a. Rotate counterclockwise to switch off power to the KNS 80.
b. Rotate clockwise to increase audio level.
c. Pull switch out to hear VOR Ident.

(8) DATA INPUT CONTROL

Dual concentric knobs. Center knob has "in" and "out" positions.

a. Frequency Data
Outer knob varies 1 MHz digit.
A carryover occurs from the units to the tens position.
Rollover occurs from 117 to 108, or vice versa.
Center knob varies frequency in .05 MHz steps regardless of whether the switch is in its in or out position.

b. Radial Data
Outer knob varies 10 degree digit.
A carryover occurs from tens to hundreds position.
A rollover to zero occurs at 360 degrees.
Center knob "in" position varies 1 degree digit.
Center knob "out" position varies 0.1 degree digit.

c. Distance Data
Outer knob varies 10 NM digit.
A carryover occurs from the tens to hundreds place.
A rollover to zero occurs at 200 NM.
Center knob "in" position varies 1 NM digit.
Center knob "out" position varies 0.1 NM digit.

(9) COURSE SELECT KNOB

Located in CDI unit.
Selects desired course through the VOR ground station or way point.

SECTION 5 - PERFORMANCE

No changes to the basic performance provided by Section 5 of this Pilot's Operating Handbook are necessary for this supplement.

PILOT'S OPERATING HANDBOOK AND FAA APPROVED AIRPLANE FLIGHT MANUAL

SUPPLEMENT No. 10 FOR AUXILIARY VACUUM SYSTEM

This supplement must be attached to the Pilot's Operating Handbook and FAA Approved Airplane Flight Manual when the Piper Auxiliary Vacuum System is installed in accordance with Piper Drawing No. 87774-2. The information contained herein supplements or supersedes the Pilot's Operating Handbook and FAA Approved Airplane Flight Manual only in those areas listed. For limitations, procedures, and performance information not contained in this supplement, consult the Pilot's Operating Handbook and FAA Approved Airplane Flight Manual.

FAA APPROVED _____

D.H. TROMPLER
D.O.A. NO. SO-1
PIPER AIRCRAFT CORPORATION
VERO BEACH, FLORIDA

DATE OF APPROVAL 12/3/86

SECTION 1 - GENERAL

This supplement supplies information necessary for the operation of the airplane when the optional Piper Auxiliary Vacuum System is installed. The information contained within this supplement is to be used in conjunction with the complete handbook.

SECTION 2 - LIMITATIONS

1. The auxiliary vacuum system is limited to standby function only. Take off with the engine driven dry air pump inoperative is not approved.
2. Discontinue flight in instrument meteorological conditions (IMC) if vacuum pressure falls below 4.8 In. Hg.
3. The auxiliary pump/motor assembly and elapsed time indicator must be removed from service after 500 hours accumulated operating time or 10 years, whichever occurs first.

SECTION 3 - EMERGENCY PROCEDURES

LOSS OF VACUUM SUCTION - Low vacuum (VAC) annunciator and VAC OFF warning lamp lit.

1. Vacuum gauge ..... Check to verify inoperative pump.

If vacuum gauge reads below 4.5 inches of mercury:

2. Auxiliary vacuum switch ..... Press AUX ON.
3. Verify vacuum pressure of 4.8 to 5.2 inches of mercury.
4. Verify VAC annunciator and VAC OFF lights go out.

CAUTION

Compass error may exceed 10° when auxiliary vacuum system is in operation.

5. Electrical load ..... Monitor
   a. Verify alternator capacity is not being exceeded.
   b. If required, turn off nonessential electrical equipment.

SECTION 4 - NORMAL PROCEDURES

A. Preflight Check.
   1. Set battery switch on and verify that VAC OFF lamp lights.

NOTE

Due to electrical power requirement of the auxiliary vacuum pump it is suggested that the engine be operating while making the following checks.

   2. Turn on auxiliary vacuum pump on and verify AUX ON light is illuminated and electrical load is approximately 15 amps on ammeter.
   3. Turn off auxiliary vacuum pump and verify AUX ON light goes out.

B. Inflight Check - Prior to entering instrument flight conditions.
   1. Turn off non-essential electrical equipment.
   2. Turn on auxiliary vacuum pump and verify AUX ON light illuminated and electrical load is approximately 15 amps on ammeter.
   3. Turn off auxiliary vacuum pump and verify AUX ON light goes out.

NOTE

For maximum service life, avoid continuous non-emergency operation of the auxiliary vacuum pump.

SECTION 5 - PERFORMANCE

No change.

SECTION 6 - WEIGHT & BALANCE

Factory installed optional equipment is included in the licensed weight and balance data in section 6 of the Pilot's Operating Handbook.

SECTION 7 - DESCRIPTION AND OPERATION

The auxiliary dry air pump system provides an independent back-up source of pneumatic power to operate the gyro flight instruments in the event the engine driven air pump fails.

The auxiliary pump is mounted on the forward side of the firewall and connects to the primary system at a manifold downstream of the vacuum regulator. Isolation of the primary and auxiliary systems from each other is accomplished by check valves on each side of the manifold. The primary system vacuum switch is located on the regulator and senses vacuum supplied to the gyros.

A control switch (labeled AUX VAC) for the auxiliary pump system is located on the right side of the instrument panel near the vacuum suction gage.

The switch button incorporates two annunciator light sections labeled VAC OFF and AUX ON. The VAC OFF section is controlled by a vacuum switch in the primary pneumatic system and illuminates an amber light when the engine driven pump is inoperative or when the system vacuum falls below the switch activation level. The AUX ON section is controlled by a vacuum switch on the manifold and illuminates a blue light when the auxiliary pump is operating and creating a vacuum in the system. When the auxiliary pump is activated at high altitude, or if the system has developed air leaks, the AUX ON light may fail to illuminate. This indicates that the system vacuum is still below the AUX ON switch activation level even though the auxiliary pump is operating. The annunciator lights do not incorporate a press-to-test feature, if the lights do not illuminate as expected, check for burned out lamps, replace with MS25237-330 bulbs and retest the system.

System electrical protection is provided by a 20 amp circuit breaker in the pump motor circuit and a 5 amp circuit breaker in the annunciator light circuit. The breakers are mounted on the circuit breaker panel.

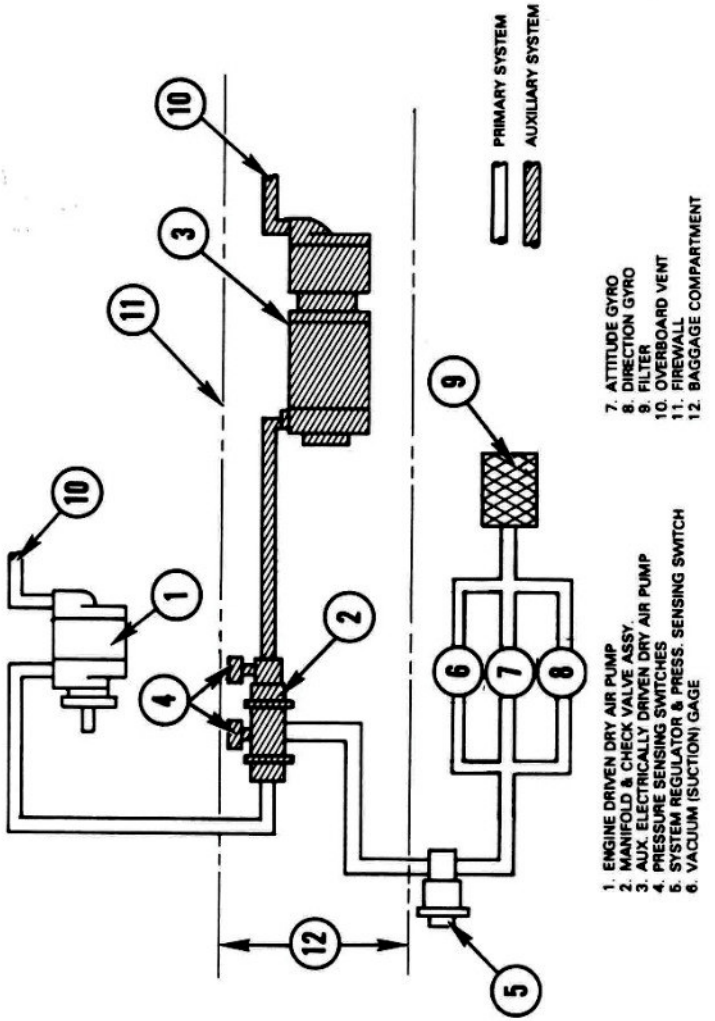

FOCA APPROVED AIRPLANE FLIGHT MANUAL SUPPLEMENT
GARMIN GPS 155 XL NAVIGATION SYSTEM

AIRPLANE MAKE:	PIPER
AIRPLANE MODEL:	PA 28-181
AIRPLANE SERIAL NO.:	2890008
REGISTRATION NO.:	HB-PKG

This document must be carried in the aircraft at all times. It describes the operating procedures for the GARMIN GPS 155 XL navigation system, installed in accordance with GARMIN Installation manual 190-00067-22 Rev. C (Rev. A or later) . FOCA approval based on „Major Alteration", dated 10. MAI 1999

The information contained herein supplements or supersedes the basic Airplane Flight Manual only in those areas listed herein. For limitations, procedures, and performance information not contained in this document, consult the basic Airplane Flight Manual.

FOCA APPROVED
Federal Office for Civil Aviation
Section FL
Maulbeerstrasse 9
CH - 3003 Berne

Dated: 10. MAI 1999

GARMIN GPS 155XL
Navigation System

PIPER PA 28-181
HB-PKG

SECTION I
GENERAL

1. The GARMIN GPS 155 XL System is a panel mounted instrument that provides position information for use in aviation applications. A user up-dateable database allows easy access to current navigation information.

2. Provided the GARMIN 155 XL System is receiving adequate usable signals,it has been demonstrated capable of and has been shown to meet the accuracy specifications for:
   - VFR/IFR enroute,terminal, and non-precision instrument approach (GPS, Loran-C, VOR, VOR-DME, TACAN, NDB, NDB-DME, RNAV)operation within the U.S. National Airspace System in accordance with AC 20-138.
   - North Atlantic Minimum Navigation Performance Specification (MNPS) Airspace in accordance with AC 91-49 and AC120-33.

   Navigation is accomplished using the WGS-84 (NAD-83) coordinate reference datum. Navigation data is based upon use of only the Global Positioning System (GPS) operated by the United States of America.

SECTION II
LIMITATIONS

1. The GARMIN GPS 155 XL Pilot's Guide, P/N 190-00067-20, Rev. A, dated February, 1998, must be immediatly available to the flight crew whenever navigation is predicated on the use of the system.

2. The GPS 155 XL must utilize software version 2.03 or later FAA approved revision.The software version is displayed on the GPS 155 XL self test page immediately after turn-on for 5 seconds.

3. A placard stating „GPS limited to VFR use only" must be installed in clear view, and easily readable by the pilot.(By the time it is intended to certify this airplane in the IFR-category, the GPS-Installation and this AFM-Supplement have to be revised.)

4. If not previously devined, the following default settings must be made in the „SET" menu of the GPS 155 XL prior to operation(refer to Pilot's Guide for procedure):

   a. NAV nm kt (sets navigation units to „nautical miles" and „knots")
   b. ALT ft fpm (sets altitude units to „feet" and „feet per minute")
   c. DATUM WGS 84 (sets map datum to WGS 84 see note below)
   d. Units deg-min (sets navigation grid units to decimal minutes)

SECTION III
EMERGENCY PROCEDURES

EMERGENCY PROCEDURES

No change

ABNORMAL PROCEDURES

If GARMIN 155 XL information is flagged, utilize remaining operational navigation equipment as required.

SECTION IV
NORMAL PROCEDURES

1. Normal operating procedures are outlined in the GARMIN GPS 155 XL Pilot's Guide, P/N 190-00067-20, Rev. A, dated February, 1998 or later appropriate revision.

2. **Message Annunciator**

   a. Unit Annunciation:

   When the GPS 155 XL has a new Message, the amber MSG annunciator will flash. When this occurs, press the MSG key on the GPS 155 XL to view the message. Continue to press the MSG key on the GPS 155 XL until the page you were viewing prior to pressing the MSG key is re-displayed. As long as the condition wich created the message continues to exist, the Message annunciator will remain illuminated.

   b. External Annunciation:

   No external MSG annunciator is connected to the GARMIN 155 XL.

3. **Waypoint Annunciator**

   a. Unit Annunciation:

   When the GPS 155 XL detects that the aircraft is 15 seconds from the next programmed waypoint or turn anticipation point, the amber WPT annunciator will flash and the CDI depiction on the CDI Page will be replaced by a flashing „Next dtk xxx" prompt. Approximately 2 seconds before the turn anticipation point (calculated for 15 degrees of bank) the WPT annunciator will turn on steady. This is the indication that you should start the turn to the next DTK. Upon passing the waypoint (or half way through the turn), the annunciator will automatically extinguish.

   b. External Annunciation:

   No external WPT annunciator is connected to the GARMIN 155 XL.

SECTION IV
NORMAL PROCEDURES (Continued)

4. **NAV/GPS Switch**

   a. A NAV/GPS Switch (Toggle-type) is used to select between GPS and NAV 1 (VOR) to interface with the Autopilot System.

   b. The NAV/GPS Switch selects no external indicator (HSI, RMI, etc.).The two switch positions are marked with placards.

   c. The NAV/GPS Switch is located in the instrument panel below the pilot's control yoke.

5. **Autopilot Operation**

Coupling of the GPS 155 XL System steering information to the autopilot can be accomplished by engaging the autopilot in the NAV mode, with the NAV/GPS switch set to GPS.

When the autopilot system is using course information supplied by the GPS 155 XL System the course pointer on the Directinal Gyro (DG) must be manually set to the desired track (DTK) indicated by the GPS 155 XL. For detailed autopilot operational instructions, refer to the FAA Approved Flight Manual Supplement for the autopilot.

NOTE: When the autopilot is using data supplied by the GPS 155 XL and the GPS 155 XL is in route mode, the course pointer must be reset to the new desired track (DTK) at each route leg change.

SECTION V
PERFORMANCE

No change

SECTION VI
WEIGHT AND BALANCE

See current weight and balance data.

SECTION VII
AIRPLANE & SYSTEM DESCRIPTIONS

See GPS 155 XL Pilot's Guide for a complete description of the GPS 155 XL system.

FOCA Approved FOCA FL / HF

Dated: 18. MAI 1999

TABLE OF CONTENTS

SECTION 10

OPERATING TIPS

Paragraph No.		Page No.
10.1	General	10-1
10.3	Operating Tips	10-1

SECTION 10

OPERATING TIPS

10.1 GENERAL

This section provides operating tips of particular value in the operation of Archer II.

10.3 OPERATING TIPS

(a) Learn to trim for takeoff so that only a very light back pressure on the control wheel is required to lift the airplane off the ground.

(b) The best speed for takeoff is about 53 KIAS under normal conditions. Trying to pull the airplane off the ground at too low an airspeed decreases the controllability of the airplane in the event of engine failure.

(c) Flaps may be lowered at airspeeds up to 102 KIAS. To reduce flap operating loads, it is desirable to have the airplane at a slower speed before extending the flaps. The flap step will not support weight if the flaps are in any extended position. The flaps must be placed in the "UP" position before they will lock and support weight on the step.

(d) Before attempting to reset any circuit breaker, allow a two to five minute cooling off period.

(e) Before starting the engine, check that all radio switches, light switches and the pitot heat switch are in the off position so as not to create an overloaded condition when the starter is engaged.

(f) Anti-collision lights should not be operating when flying through cloud, fog or haze, since reflected light can produce spacial disorientation. Strobe lights should not be used in close proximity to the ground such as during taxiing, takeoff or landing.

(g) The rudder pedals are suspended from a torque tube which extends across the fuselage. The pilot should become familiar with the proper positioning of his feet on the rudder pedals so as to avoid interference with the torque tube when moving the rudder pedals or operating the toe brakes.

(h) In an effort to avoid accidents, pilots should obtain and study the safety related information made available in FAA publications such as regulations, advisory circulars, Aviation News, AIM and safety aids.

(i) Prolonged slips or skids which result in excess of 2000 ft. of altitude loss, or other radical or extreme maneuvers which could cause uncovering of the fuel outlet must be avoided as fuel flow interruption may occur when tank being used is not full.

(j) Hand starting of the engine is not recommended, however, should hand starting of the engine be required, only experienced personnel should attempt this procedure. The magneto selector should be placed to "LEFT" during the starting procedure to reduce the probability of "kick back." Place the ignition switch to "BOTH" position after the engine has started.